GENERAL NOTES

1. CODE COMPLIANCE
   ALL WORK SHALL COMPLY WITH THE 2015 IBC. 2015 IRC, 2015 IMC, 2015 IFGC, 2015 IFC, 2015 UPC, 2015 IPMC, 2008 NEC, 2015 INTERNATIONAL ENERGY CONSERVATION CODE WITH WASHINGTON STATE AMENDMENTS, 2009 ICC A117.1, AND WITH ALL LOCAL CODES, ORDINANCES, AND COVENANTS OF THE JURISDICTION WHERE IT IS BUILT.
2. DIMENSIONS
   A. DO NOT SCALE DRAWINGS. VERIFY ALL DIMENSIONS PRIOR TO STARTING CONSTRUCTION. NOTIFY THE ARCHITECT OF DISCREPANCIES . IF WORK IS STARTED PRIOR TO NOTIFICATION, THE GENERAL AND SUBCONTRACTOR PROCEED AT THEIR OWN RISK.
   B. UNLESS OTHERWISE NOTED, PLAN DIMENSIONS ARE TO FACE OF STUDS OR FACE OF CONCRETE WALLS. FACE OF STONE VENEER LIES 6" +/- OUTSIDE THE FACE OF FRAMING. INTERIOR PLAN DIMENSIONS ARE TO FACE OF STUDS UNLESS OTHERWISE NOTED.
   C. VERIFY ALL ROUGH-IN DIMENSIONS FOR WINDOWS, DOORS, PLUMBING, ELECTRICAL FIXTURES AND APPLIANCES PRIOR TO COMMITMENT OF WORK. NOTIFY ARCHITECT OF ANY DISCREPANCIES OF DIMENSIONAL TOLERANCES REQUIRED.
3. DOCUMENT REVIEW/VERIFICATION:
   CONSULT WITH ARCHITECT REGARDING ANY SUSPECTED ERRORS, OMISSIONS, OR CHANGES ON PLANS BEFORE PROCEEDING WITH THE WORK. APPROVAL BY AN INSPECTOR DOES NOT CONSTITUTE AUTHORITY TO DEVIATE FROM THE DRAWINGS OR SPECIFICATIONS.
4. ROUGH OPENINGS/BACKING:
   VERIFY SIZE AND LOCATION, AS WELL AS PROVIDE ALL OPENINGS THROUGH FLOORS AND WALLS, FURRING, CURBS, ANCHORS, INSERTS, EQUIPMENT BASES AND ROUGH BUCKS/BACKING FOR SURFACE-MOUNTED ITEMS.
5. FURRING:
   PROVIDE FURRING AS REQUIRED TO CONCEAL MECHANICAL AND/OR ELECTRICAL EQUIPMENT IN FINISHED AREAS. FURRING NOT SHOWN ON PLANS SHALL BE APPROVED BY ARCHITECT PRIOR TO CONSTRUCTION.
6. GRADES: VERIFY ALL GRADES AND THEIR RELATIONSHIP TO THE BUILDING(S).
7. FLOOR LINES: "FLOOR LINE" REFERS TO TOP OF CONCRETE SLAB OR TOP OF WOOD SUBFLOOR.
8. REPETITIVE FEATURES: OFTEN DRAWN ONLY ONCE AND SHALL BE PROVIDED AS IF FULLY DRAWN.
9. DOORS:
   DOORS NOT DIMENSIONALLY LOCATED SHALL BE 6" FROM STUD FACE TO EDGE OF DOOR, ROUGH OPENING OR CENTERED BETWEEN WALLS AS SHOWN.
10. WOOD MEMBERS IN CONTACT WITH CONCRETE, AND/OR EXPOSED TO WEATHER:
    TO BE PRESSURE TREATED, TYPICAL. PROVIDE PRESSURE TREATED SILL PLATE IF FINISH GRADE IS WITHIN 8", TYPICAL.
11. FRAMING:
    ALL NEW INTERIOR FRAME PARTITIONS TO BE 2X4 @ 16" O.C., & ALL NEW EXTERIOR FRAME PARTITIONS TO BE 2X6 @ 16" O.C., UNLESS OTHERWISE NOTED. VERIFY W/ STRUCTURAL DRAWINGS. EXISTING EXTERIOR WALLS ARE 2X4 STUDS @ 16" O.C., AND ARE TO REMAIN.
12. VENTILATION:
    VENT ALL BATHROOM FANS, LAUNDRY FANS, RANGE HOODS AND DRYER VENTS TO OUTSIDE ATMOSPHERE. BATHROOM/UTILITY ROOM FANS SHALL BE CAPABLE OF 5 AIR CHANGES PER HOUR AND SHALL BE VENTED DIRECTLY TO THE OUTSIDE THROUGH SMOOTH, RIGID, NON-CORROSIVE METAL, 24 GA. DUCTWORK. FLEX DUCTING IS NOT ALLOWED.
13. FLUES: FLUES TO BE LOCATED MINIMUM 2' FROM ALL COMBUSTIBLE MATERIALS.
14. DOWNSPOUTS: LOCATE NEW DOWNSPOUTS AS SHOWN ON ROOF PLAN, FLOOR PLANS & ELEVATIONS.
15. OTHER DOCUMENTATION:
    REFER TO STRUCTURAL, MECHANICAL, ELECTRICAL, AND/OR LANDSCAPE DRAWINGS FOR ADDITIONAL DRAWINGS, NOTES, SCHEDULES, AND SYMBOLS.
16. PROTECTION:
    PROTECT ALL EXISTING FINISHES AND SURFACES. ANY DAMAGE WILL BE REPAIRED WITHOUT ADDITIONAL COST TO OWNER.
17. PERMITS:
    SEPARATE ELECTRICAL, MECHANICAL, AND PLUMBING PERMITS ARE REQUIRED IN ADDITION TO THE BASIC BUILDING PERMIT
18. ROOFING: PROVIDE NEW ROOFING TO MATCH EXISTING.
19. EXHAUST DUCTS: PROVIDE BACKDRAFT DAMPERS AT ALL EXHAUST DUCTS.
20. PROVIDE COMBUSITON AIR OPENINGS INTO FURNACE ROOM PER UMC 703.
21. APPLIANCES:
    CLEARANCES OF UL LISTED APPLIANCES FROM COMBUSTIBLE MATERIALS SHALL BE AS SPECIFIED IN UL LISTING.
22. WATER FLOW:
    SHOWER SHALL BE EQUIPPED WITH FLOW CONTROL DEVICE TO LIMIT WATER FLOW TO 2.5 GALLONS PER MINUTE.
23. SMOKE DETECTORS:
    SMOKE & CARBON MONOXIDE THROUGHT NEW CONSTRUCTION. TO BE MONITORED PER FIRE DEPARTMENT REQUIREMENTS.
24. WALK-THROUGHS:
    THE CONTRACTOR SHALL SCHEDULE WALK-THROUGHS AT EACH OF THE VELOW NOTED INTERVALS AT MINIMUM:
    1. PRIOR TO THE COMMENCEMENT OF CONSTRUCTION
    2. PRIOR TO THE COMMENCEMENT OF MECHANICAL & ELECTRICAL WORK

PROJECT DATA

PROJECT ADDRESS:	8454 W MERCER WAY MERCER ISLAND, WA 98040
PROPERTY TAX ID NUMBER:	362571-0050
SCOPE OF WORK:	REMOVAL AND REPLACEMENT OF EXISTING ATTACHED GARAGE, ALONG WITH A REMODEL OF THE EXISTING KITCHEN, DINING, FAMILY ROOM, AND LAUNDRY AREA AND A NEW REC ROOM ADDITION ON THE SECOND FLOOR
ZONING:	R-8.4
CONSTRUCTION TYPE:	TYPE V B
SEISMIC ZONE:	3
NUMBER OF STORIES:	2 STORY
FIRE PROTECTION:	-
BUILDING HEIGHT	30 FT ABOVE AVERAGE BUILDING ELEVATION (FLAT ROOF) 35 FT ABOVE AVERAGE BUILDING ELEVATION (SLOPED ROOF)
LOT AREA:	12,745 SF
SETBACKS:	FRONT LOT LINE = 20 FT REAR LOT LINE = 25 FT SIDE LOT LINES = 15 FT (TOTAL)
STRUCTURAL COVERAGE:	
HARD SURFACE:	
IMPERVIOUS SURFACE:	
FRONT YARD GREENSCAPE:	

PROJECT TEAM

OWNER:	GARDNER MORELLI 8454 W MERCER WAY MERCER ISLAND, WA 98040 PHONE:
ARCHITECT:	STURMAN ARCHITECTS, INC. 9 - 103RD AVE NE SUITE 203 BELLEVUE, WA 98004 PHONE: 425.451.7003 CONTACT: BRAD STURMAN
STRUCTURAL:	SWENSON SAY FAGET 2124 THIRD AVE SUITE 100 SEATTLE, WA 98121 PHONE: 206.443.6212 CONTACT: VLADIMIR BERKA
CIVIL:	
CONTRACTOR:	J&D HOMES, LLC

LEGAL DESCRIPTION

ISLAND POINT #4 TGW N 76.00 FT OF W 112.00 FT
OF GL 2 STR 32-24-5
Plat Block:
Plat Lot: 5 &

SHEET INDEX

A1.0 GENERAL & ENERGY NOTES, PROJECT DATA, INDEX, SITE PLAN
A2.0 MAIN FLOOR PLAN/DOOR SCHEDULE
A2.1 UPPER FLOOR PLAN
A2.2 ROOF PLAN
A3.0 ELEVATIONS
A3.1 ELEVATIONS
A4.0 BUILDING SECTIONS
A4.1 BUILDING SECTIONS
A5.0 WALL SECTIONS
A8.0 DETAILS
S1.0 GENERAL STRUCTURAL NOTES
S2.0 FOUNDATION PLAN/MAIN FLOOR FRAMING
S2.1 UPPER FLOOR FRAMING/LOW ROOF FRAMING/PARTIAL ATTIC FRAMING
S2.2 HIGH ROOF FRAMING PLAN
S3.0 STRUCTURAL DETAILS
S3.1 STRUCTURAL DETAILS
S3.2 STRUCTURAL DETAILS

2015 WSEC CREDITS

PROJECT IS LESS THAN 500 SQ FT NEWLY AFFECTED CONDITIONED AREA REQUIRING .5 CREDITS

CREDITS	OPTION	DESCRIPTION
0.5	5A	EFFICIENT WATER HEATING SHOWERHEADS <1.75GPM, LAVATOIRES <1.0GPM,
TOTAL CREDITS 0.5		

A.B.E.

	MIDPOINT ELEVATION	SEGMENT LENGTH
A:	273.0 FT	45.0 FT
B:	273.0 FT	6.0 FT
C:	272.5 FT	9.6 FT
D:	272.5 FT	1.9 FT
E:	272.0 FT	5.9 FT
F:	271.9 SF	1.9 SF
G	271.8 SF	8.1 SF
H:	271.0 SF	14.7 SF
I:	271.0 SF	2.0 SF
J:	270.8 SF	22.0 SF
K:	270.8 SF	2.0 SF

	MIDPOINT ELEVATION	SEGMENT LENGTH
L:	270.8 SF	12.7 SF
M:	271.0 SF	8.2 SF
N:	271.0 SF	1.9 SF
O:	270.8 SF	5.9 SF
P:	271.0 SF	1.9 SF
Q:	271.0 SF	25.0 SF
R:	270.8 SF	16.5 SF
S:	270.8 SF	15.0 SF
T:	271.0 SF	19.9 SF
U:	271.0 SF	44.9 SF
V:	271.0 SF	21.1 SF

A.B.E.
322.5 FT

$$\frac{\text{MID POINT ELEVATION X SEGMENT LENGTH:}}{\text{TOTAL WALL SEGMENT LENGTH:}} = \frac{79,277.7\ FT^{*}2}{292.1\ FT} = 271.4\ FT$$

NOTE: ELEVATIONS ARE ESTIMATES BASED ON GIS CONTOURS
BUILDING HEIGHT TO REMAIN UNCHANGED

LOT COVERAGE AND HARDSCAPE

LOT COVERAGE

	GROSS LOT S.F.	ROOF STRUCT.	DRIVEWAY	TOTAL LOT COVERAGE	% LOT COVERAGE
EXISTING LOT COVERAGE	12,745 SF	3,481 SF	552 SF	4,033 SF	31.6 %
PROPOSED LOT COVERAGE		3,481 SF	552 SF	4,033 SF	31.6 %
NET GAIN/LOSS LOT COVERAGE		0 SF	0 SF	0 SF	0 %
% ALLOWED LOT COVERAGE				3,824 SF ALLOWABLE	30 %

HIGHEST EL: 273.2' -
LOWEST EL: 226.4'
ELEVATION DIFFERENCE= 46.8'

46.8' DIVIDED BY 142.89' (HORIZ. DIST. BTWN. HIGHEST & LOWEST ELEV.) = .328

LOT SLOPE IS 32.8%,
WHICH IS MORE THAN 30% BUT LESS THAN 50% SO LOT COVERAGE ALLOWED IS 30%.

ADDITIONAL 9% OF LOT SIZE WILL DETERMINE ALLOWABLE HARDSCAPE SURFACE

HARDSCAPE

	GROSS LOT S.F.		KEYSTONE WALL	CONCRETE WALL	ROCKERY	TOTAL HARDSCAPE	% HARDSCAPE
EXISTING HARDSCAPE	12,745 SF		138.4 SF	18.0 SF	96.2 SF	252.6 SF	1.9 %
PROPOSED HARDSCAPE			138.4 SF	18.0 SF	96.2 SF	252.6 SF	1.9 %
NET GAIN/LOSS HARDSCAPE			0 SF	+0 SF	+0 SF	0 SF	+0.0 %
% ALLOWED HARDSCAPE						1,147 SF ALLOWABLE	9 %

BUILDING AREA

	MAIN FLOOR	SECOND FLOOR	HEATED SUB-TOTAL	ATTACHED GARAGE	GRAND TOTAL	UNHEATED BALCONY
EXISTING HOUSE:	1,964 SF	1,316 SF	3,280 SF	615 SF	3,895 SF	96 SF
PROPOSED HOUSE:	1,983 SF	1,759 SF	3,742 SF	596 SF	4,338 SF	96 SF
CHANGE:	+19 SF	+443 SF	+462 SF	-19 SF	+443 SF	0 SF

ENERGY NOTES

CODE:	2015 W.S.E.C. & 2015 IRC, WAC 51-11R
CLIMATIC ZONE:	ZONE #4C
SPACE HEAT TYPE:	NATURAL GAS, IN-FLOOR RADIANT HEAT
INSULATION VALUES:	WALLS: R-21 FLAT ATTICS/CEILINGS: R-49 VAULTED CEILINGS: R-38 FLOORS (OVER UNHEATED SPACES): R-30 SLAB-ON-GRADE: R-10
THERMAL STANDARDS FOR OPENINGS:	UNLIMITED OPTION
AIR INFILTRATION:	MANUFACTURED DOORS/WINDOWS: CONFORM TO SECTION R402.4.3 OF THE WASHINGTON STATE ENERGY CODE EXTERIOR JOINTS/OPENINGS: SEAL, CAULK, GASKET OR WEATHERSTRIP TO LIMIT AIR LEAKAGE AT EXTERIOR JOINTS AROUND WINDOW AND DOOR FRAMES, OPENINGS BETWEEN WALLS AND FOUNDATION, BETWEEN WALLS AND ROOF; OPENINGS AT PENETRATIONS OF UTILITY SERVICES AND ALL OTHER SUCH OPENINGS IN THE BUILDING ENVELOPE
MOISTURE CONTROL:	WALLS: VAPOR RETARDER BONDED TO BATT INSULATION; INSTALL WITH STAPLES NOT MORE THAN 8 INCHES ON CENTER AND WITH A GAP BETWEEN AND OVER FRAMING NOT GREATER THAN 1/16 OF AN INCH; OR, VAPOR RETARDER OF ONE PERM CUP RATING (4 MIL POLYETHYLENE) ATTICS/CEILINGS: VAPOR RETARDER OF ONE PERM CUP RATING (4 MIL POLYETHYLENE). INSTALL CONTINUOUSLY CRAWL SPACE: 6 MIL POLYETHELENE
VENTILATION:	ATTICS WITH LOOSE FILL: N.A. BAFFLE VENT OPENINGS TO DEFLECT AIR ABOVE INSULATION SURFACE ENCLOSED JOIST OR RAFTER SPACES: PROVIDE MINIMUM OF ONE INCH CLEAR VENTED AIR SPACE ABOVE INSULATION. TAPER OR COMPRESS INSULATION AT PERIMETER TO INSURE PROPER VENTILATION
HEATING & COOLING:	IN-FLOOR RADIANT HEATING
TEMP. CONTROL:	FOR HEATING AND COOLING, THERMOSTAT SHALL BE CAPABLE OF BEING SET FROM 55-85 DEGREES FARENHEIT AND OF OPERATING THE HEATING/COOLING SYSTEM IN SEQUENCE. THERMOSTAT TO BE AUTOMATIC DAY/NIGHT SETBACK TYPE.
DUCT INSULATION:	THERMALLY INSULATE ALL PLENUMS, DUCTS AND ENCLOSURES IN ACCORDANCE WITH TABLE R403.3.1 OF THE WASHINGTON STATE ENERGY CODE. a. ALL HEATING DUCTS IN UNCONDITIONED SPACES SHALL BE INSULATED WITH A MIN. OF R-8. ALL SEAM JOINTS SHALL BE TAPED, SEALED AND FASTENED WITH THE MINIMUM OF FASTENERS PER WSEC. b. DUCTS WITHIN A CONCRETE SLAB OR IN THE GROUND SHALL BE INSULATED TO R-10, WITH INSULATION DESIGNED TO BE USED BELOW GRADE.
LIGHTING:	RECESSED LIGHTING FIXTURES INSTALLED IN BUILDING ENVELOPE SHALL COMPLY WITH WSEC PROVISIONS AND SHALL BE IC LISTED. ALL ROOMS WITHOUT GLAZING SHALL HAVE ARTIFICIAL LIGHTING ACROSS THE AREA OF THE ROOM PRODUCING AN AVERAGE 6 FOOTCANDLES AT 30" ABOVE THE FLOOR
PIPE INSULATION:	NON RECIRCULATING HOT AND COLD WATER PIPES LOCATED IN UNCONDITIONED SPACE SHALL BE INSULATED TO R-3 MIN. PLUMBING OR MECHANICAL CANNOT DISPLACE THE REQUIRED INSULATION.
WHOLE HOUSE VENTILATION:	WHOLE HOUSE VENTILATION SYSTEM: a. WHOLE HOUSE VENTILATION SHALL BE PROVIDED BY EXHAUST FAN PROVIDING 105 CFM RUNNING CONTINUOUSLY PER 2012 IRC TABLES M1507.3.3 (1&2). FAN SHALL BE CONNECTED TO A 24 HOUR CLOCK TIMER AND HAVE A SONE RATING OF LESS THAN 1.0. VENTILATION SHALL BE ABLE TO OPERATE INDEPENDENTLY OF HEATING SYSTEM. b. SYSTEM SHALL HAVE A 5"Ø SMOOTH FRESH AIR DUCT W/ LOUVER & SCREEN CONNECTED TO THE RETURN AIR STREAM 4' UPSTREAM OF THE AIR HANDLER AND INSULATED W/ R-4 MIN IN HEATED AREAS. c. SHALL HAVE A FILTER WITH A MERV OF AT LEAST 6 INSTEALLED IN AN EASILY ACCESSIBLE LOCATION. d. FRESH AIR VENT SHALL BE LOCATED AWAY FROM SOURCES OF ODORS OR FUMES, MIN 10' FROM PLUMBING OR APPLIANCE VENTS, AWAY FROM ROOMS W/ FUEL BURNING APPLIANCES, AND OUT OF ATTICS, CRAWL SPACES, AND GARAGES.

DUTY OF COOPERATION

RELEASE AND ACCEPTANCE OF THESE DOCUMENTS INDICATES COOPERATION AMONG THE OWNER, CONTRACTOR, AND STURMAN ARCHITECTS. ANY ERRORS, OMISSIONS, OR DISCREPANCIES DISCOVERED IN THE USE OF THESE DOCUMENTS SHALL BE REPORTED IMMEDIATELY TO STURMAN ARCHITECTS. FAILURE TO DO SO SHALL RELIEVE STURMAN ARCHITECTS FROM ANY RESPONSIBILITY FOR THE CONSEQUENCES.

ANY DEVIATIONS FROM THESE DOCUMENTS WITHOUT THE CONSENT OF STURMAN ARCHITECTS ARE UNAUTHORIZED. FAILURE TO OBSERVE THESE PROCEDURES SHALL RELIEVE STURMAN ARCHITECTS OF RESPONSIBILITY FOR ALL CONSEQUENCES ARISING FROM SUCH ACTIONS.

GROSS FLOOR AREA

LOT SIZE	=	12,745 SF
GFA THRESHOLD	=	5,000 SF OR 40% (5,098) OF THE LOT AREA, WHICHEVER IS LESS
EXISTING RESIDENCE GFA:		
MAIN FLOOR	=	2,578 SF
SECOND FLOOR	=	1,197 SF
16'-8" OPEN AREA (200%)	=	239 SF
TOTAL EXISTING:	=	4,014 SF
EXISTING GFA IS 4,014 SF OR 31.5%		
PROPOSED RESIDENCE GFA:		
MAIN FLOOR	=	2,578 SF
UPPER FLOOR	=	1,640 SF
16'-8" OPEN AREA	=	239 SF
TOTAL PROPOSED:	=	4,457 SF
PROPOSED GFA IS 4,457 SF OR 35.0%		

VICINITY MAP

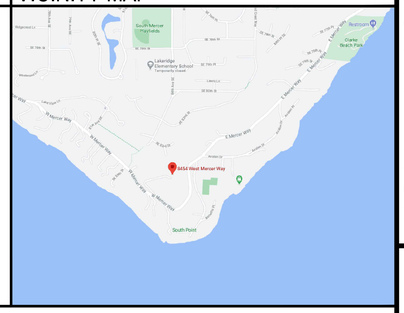
Mercerwood Dr
Mercer View Dr
SE 36th St
SE 35th St
SE 34th St
Island Crest Way
Gallagher Hill Rd
Island Crest Way
Lakemont Blvd SE
Lakemont Blvd SE
Lakemont Blvd SE
Lakemont Blvd SE
Lakemont Blvd SE
Lakemont Blvd SE
Lakemont Blvd SE
Lakemont Blvd SE
SE 32nd St
SE 31st St
SE 30th St
SE 29th St
SE 28th St
SE 27th St
SE 26th St
SE 25th St
SE 24th St
SE 23rd St
SE 22nd St
SE 21st St
SE 20th St
SE 19th St
SE 18th St
SE 17th St
SE 16th St
SE 15th St
SE 14th St
SE 13th St
SE 12th St
SE 11th St
SE 10th St
SE 9th St
SE 8th St
SE 7th St
SE 6th St
SE 5th St
SE 4th St
SE 3rd St
SE 2nd St
SE 1st St
Mercer Ridge Dr
Island Crest Way
Island Crest Way
Island Crest Way

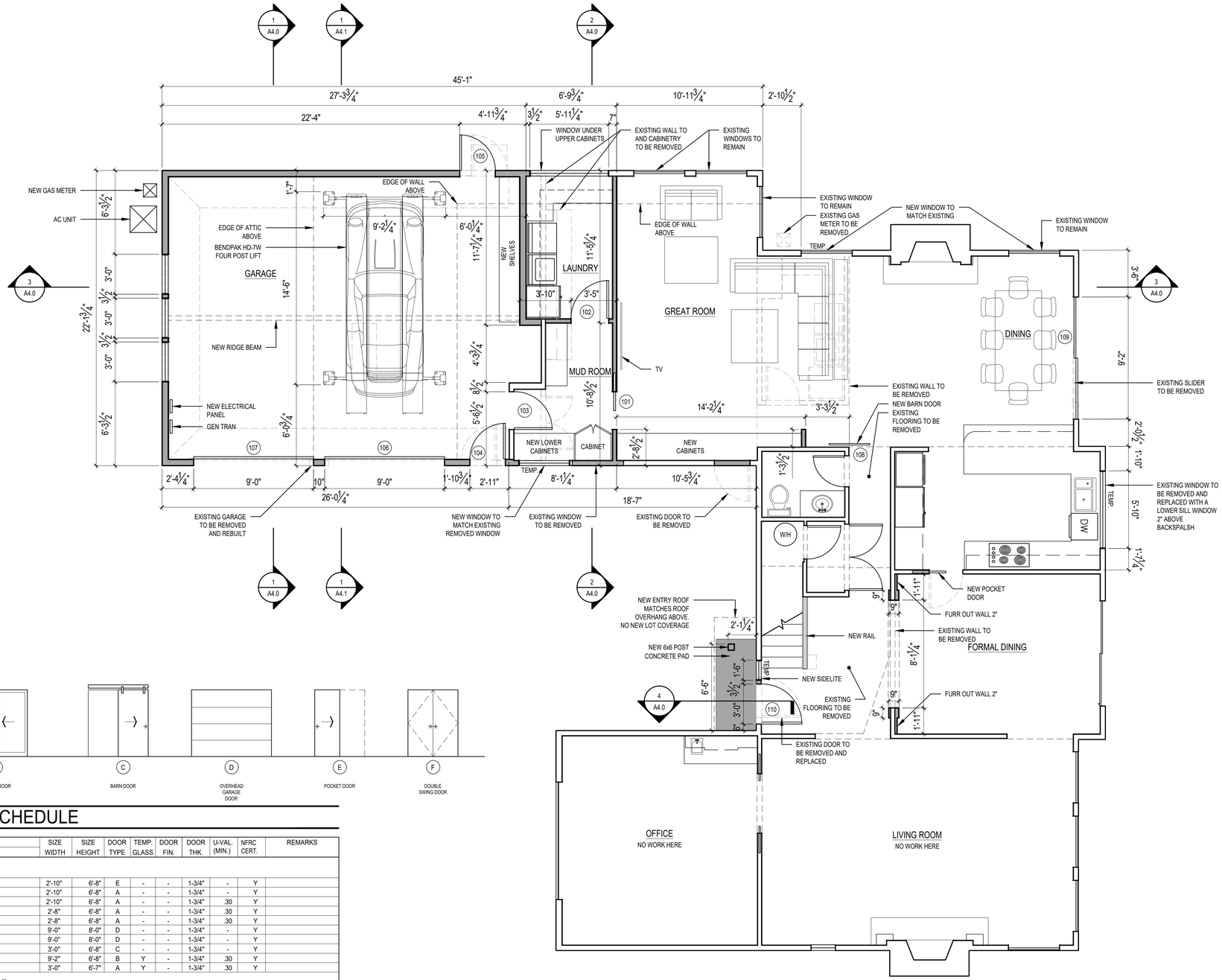

DOOR TYPES:

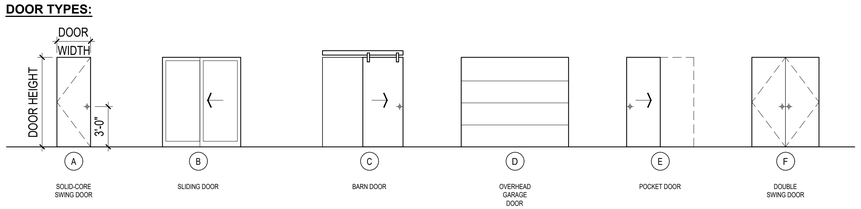

DOOR SCHEDULE

DOOR NO.	LOCATION	SIZE WIDTH	SIZE HEIGHT	DOOR TYPE	TEMP. GLASS	DOOR FIN.	DOOR THK.	U-VAL. (MIN.)	NFRC CERT.	REMARKS
MAIN FLOOR										
101	MUD ROOM	2'-10"	6'-8"	E	-	-	1-3/4"	-	Y	
102	LAUNDRY	2'-10"	6'-8"	A	-	-	1-3/4"	-	Y	
103	MUD ROOM	2'-10"	6'-8"	A	-	-	1-3/4"	.30	Y	
104	GARAGE	2'-8"	6'-8"	A	-	-	1-3/4"	.30	Y	
105	GARAGE	2'-8"	6'-8"	A	-	-	1-3/4"	.30	Y	
106	GARAGE	9'-0"	8'-0"	D	-	-	1-3/4"	-	Y	
107	GARAGE	9'-0"	8'-0"	D	-	-	1-3/4"	-	Y	
108	GREAT ROOM	3'-0"	6'-8"	C	-	-	1-3/4"	-	Y	
109	DINING ROOM	9'-2"	6'-8"	B	Y	-	1-3/4"	.30	Y	
110	ENTRY DOOR	3'-0"	6'-7"	A	Y	-	1-3/4"	.30	Y	
UPPER FLOOR										
201	REC ROOM	2'-6"	6'-8"	A	-	-	1-3/4"	-	Y	
202	CLOSET	5'-0"	6'-8"	F	-	-	1-3/4"	-	Y	
203	BATH 2	2'-4"	6'-8"	A	-	-	1-3/4"	-	Y	

1 MAIN FLOOR PLAN

SCALE: 1/4" = 1'-0"

SCALE: IF SHEET IS LESS THAN 24" x 36", IT IS A REDUCED PRINT, REDUCE SCALE ACCORDINGLY

PERMIT SET 01/21/2021

PLOT DATE: 1/21/2021 FILE NAME:

STURMAN ARCHITECTS

TEL (425) 451-7003

9 103rd Avenue NE
Suite 203
Bellevue, WA 98004

5562 REGISTERED ARCHITECT
BRADLEY J. STURMAN
STATE OF WASHINGTON

www.sturmanarchitects.com

All Rights Reserved
© 2020

MORELLI RESIDENCE

8454 W MERCER WAY
MERCER ISLAND, WA 98040

MAIN FLOOR PLAN DOOR SCHEDULE

REVISIONS:

DRAWN BY: JM

CHECKED BY: BJS

SHEET A2.0

OF

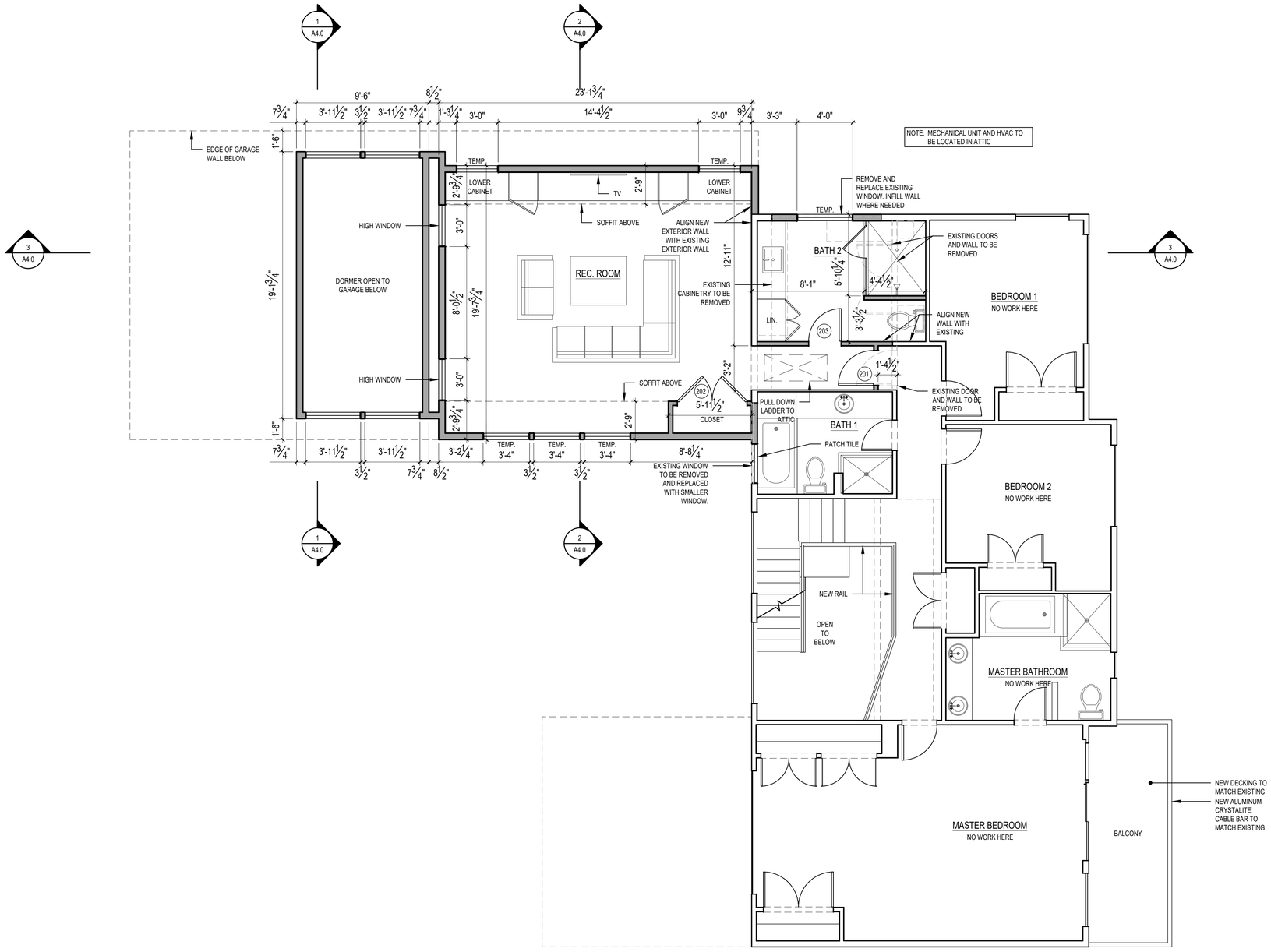

1 UPPER FLOOR PLAN

SCALE: 1/4" = 1'-0"

STURMAN ARCHITECTS

TEL (425) 451-7003

9 103rd Avenue NE
Suite 203
Bellevue, WA 98004

5562 REGISTERED ARCHITECT
BRADLEY J. STURMAN
STATE OF WASHINGTON

www.sturmanarchitects.com

All Rights Reserved
© 2020

MORELLI RESIDENCE

8454 W MERCER WAY
MERCER ISLAND, WA 98040

UPPER FLOOR PLAN

REVISIONS:

DRAWN BY: JM

CHECKED BY: BJS

SCALE: IF SHEET IS LESS THAN 24" x 36", IT IS A REDUCED PRINT, REDUCE SCALE ACCORDINGLY

PERMIT SET 01/21/2021

PLOT DATE: 1/21/2021 FILE NAME:

SHEET A2.1

OF

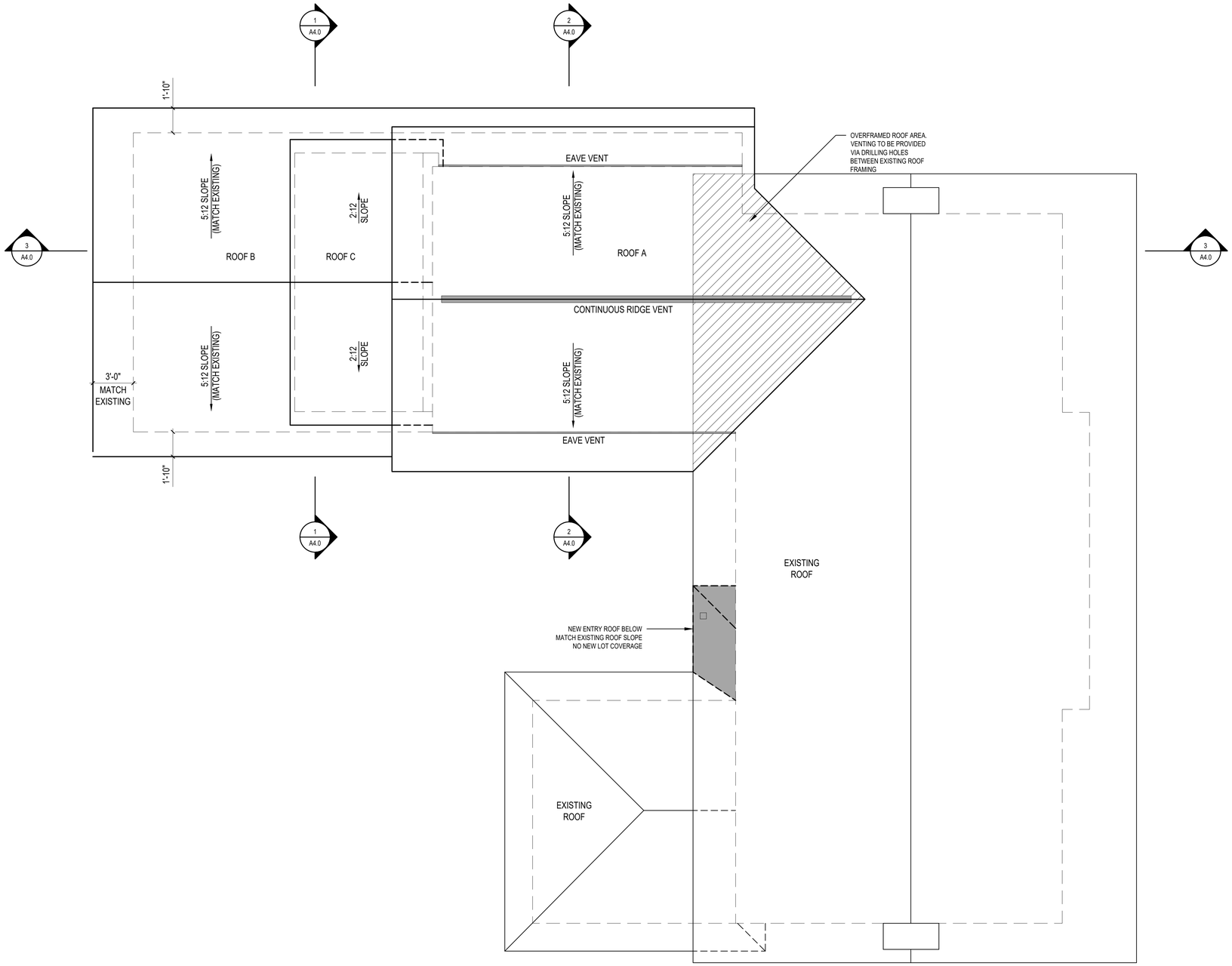

ROOF VENT CALCULATIONS

CODE REQUIREMENT				CALCULATIONS									ACTUAL	
DESCRIPTION	SF AREA	REQ. VENTING		VENT TYPE		X	VENT L.F.	=	TOTAL	X	SF CONVERT.	X	80% EFF	
		PER SF AREA							VENT AREA		1/144		FACTOR	TOTAL
		150	300	RIDGE	SOFFIT				SQ. IN.					
ROOF A	742.4		2.47		18 SQ.IN./FT.		45.5		819		5.69		4.55	6.57
					1.5" VENT									
				12 SQ.IN./FT.			30.3		363.6		2.53		2.02	
				1.5" VENT										

1 ROOF PLAN

SCALE: 1/4" = 1'-0"

SCALE: IF SHEET IS LESS THAN 24" x 36", IT IS A REDUCED PRINT, REDUCE SCALE ACCORDINGLY

PERMIT SET 01/21/2021

PLOT DATE: 1/21/2021 FILE NAME:

STURMAN ARCHITECTS

TEL (425) 451-7003

9 103rd Avenue NE
Suite 203
Bellevue, WA 98004

5562 REGISTERED ARCHITECT
BRADLEY J. STURMAN
STATE OF WASHINGTON

www.sturmanarchitects.com
All Rights Reserved
© 2020

MORELLI RESIDENCE

8454 W MERCER WAY
MERCER ISLAND, WA 98040

ROOF PLAN
VENT CALCULATIONS

REVISIONS:

DRAWN BY: JM

CHECKED BY: BJS

SHEET A2.2

OF

WINDOW SCHEDULE

WINDOW MARK	DESCRIPTION	R.O. SIZE WIDTH	R.O. SIZE HEIGHT	TEMP.	QTY.	TOTAL AREA (SF)	U-VALUE (MIN.)	NFRC CERT.	GLAZING	REMARKS & NOTES
A	FIXED	3'- 10"	6'- 0"	Y	1	22.9'	.30	Y	LOW E / CLEAR	MATCH EXISTING WINDOW IN ROOM
B	SINGLE SLIDER	6'- 0"	1'- 2"	-	1	7.0'	.30	Y	LOW E / CLEAR	-
C	CASEMENT	3'- 11 1/2"	1'- 0"	-	4	15.8'	.30	Y	LOW E / CLEAR	-
D	FIXED/CASEMENT	3'- 0"	3'- 6"	Y	2	21.0'	.30	Y	LOW E / CLEAR	-
E	CASEMENT	3'- 4"	4'- 0"	Y	3	39.9'	.30	Y	LOW E / CLEAR	EGRESS
F	SINGLE SLIDER	3'- 10"	3'- 6"	Y	1	13.4'	.30	Y	LOW E / CLEAR	EGRESS
G	FIXED	3'- 0"	1'- 8"	-	2	10.0'	.30	Y	LOW E / CLEAR	-
H	FIXED	2'- 10 1/4"	3'- 0"	Y	1	8.5'	.30	Y	LOW E / CLEAR	-
I	FIXED	3'- 0"	4'- 0"	Y	3	36.0'	.30	Y	LOW E / CLEAR	-
J	SINGLE SLIDER	4'- 0"	3'- 10"	Y	1	15.3'	.30	Y	LOW E / CLEAR	EGRESS
K	FIXED	5'- 10"	3'- 7"	Y	1	20.8'	.30	Y	LOW E / CLEAR	-
L	FIXED	1'- 6"	6'- 7"	Y	1	9.9'	.30	Y	LOW E / CLEAR	-

1 NORTH ELEVATION

SCALE: 1/4" = 1'-0"

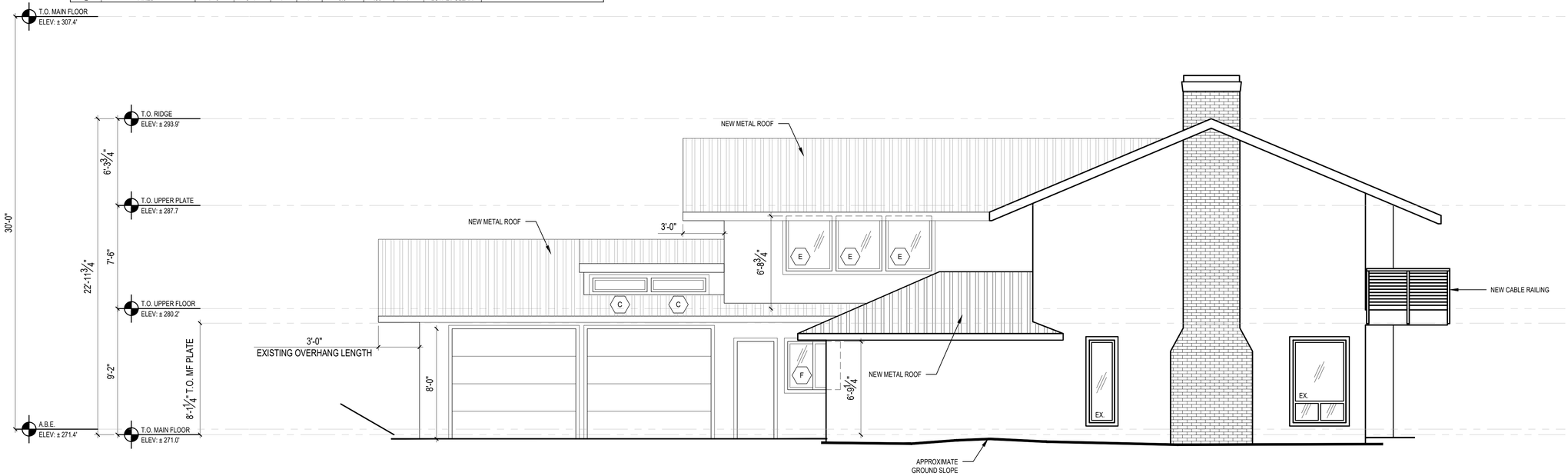

1 SOUTH ELEVATION

SCALE: 1/4" = 1'-0"

SCALE: IF SHEET IS LESS THAN 24" x 36", IT IS A REDUCED PRINT, REDUCE SCALE ACCORDINGLY

PERMIT SET 01/21/2021

PLOT DATE: 1/21/2021 FILE NAME:

STURMAN ARCHITECTS

TEL (425) 451-7003

9 103rd Avenue NE
Suite 203
Bellevue, WA 98004

5562 REGISTERED ARCHITECT
BRADLEY J. STURMAN
STATE OF WASHINGTON

www.sturmanarchitects.com
All Rights Reserved
© 2020

MORELLI RESIDENCE

8454 W MERCER WAY
MERCER ISLAND, WA 98040

EXTERIOR ELEVATIONS

REVISIONS:

DRAWN BY: JM

CHECKED BY: BJS

SHEET A3.0

OF

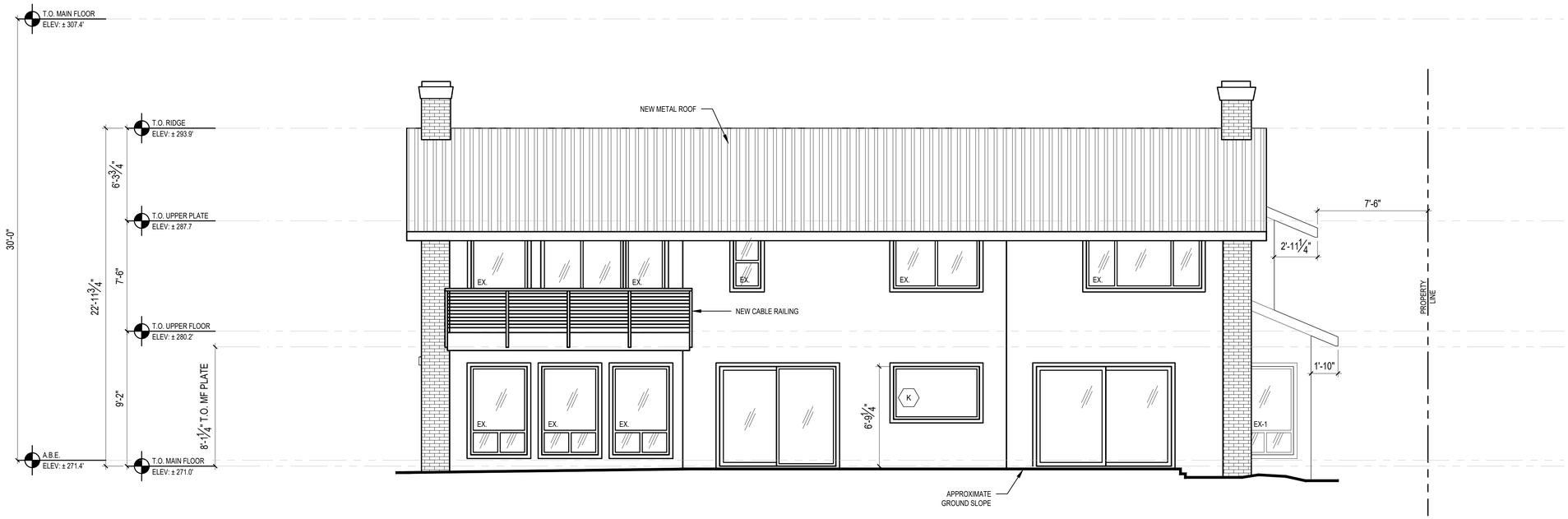

1 EAST ELEVATION

SCALE: 1/4" = 1'-0"

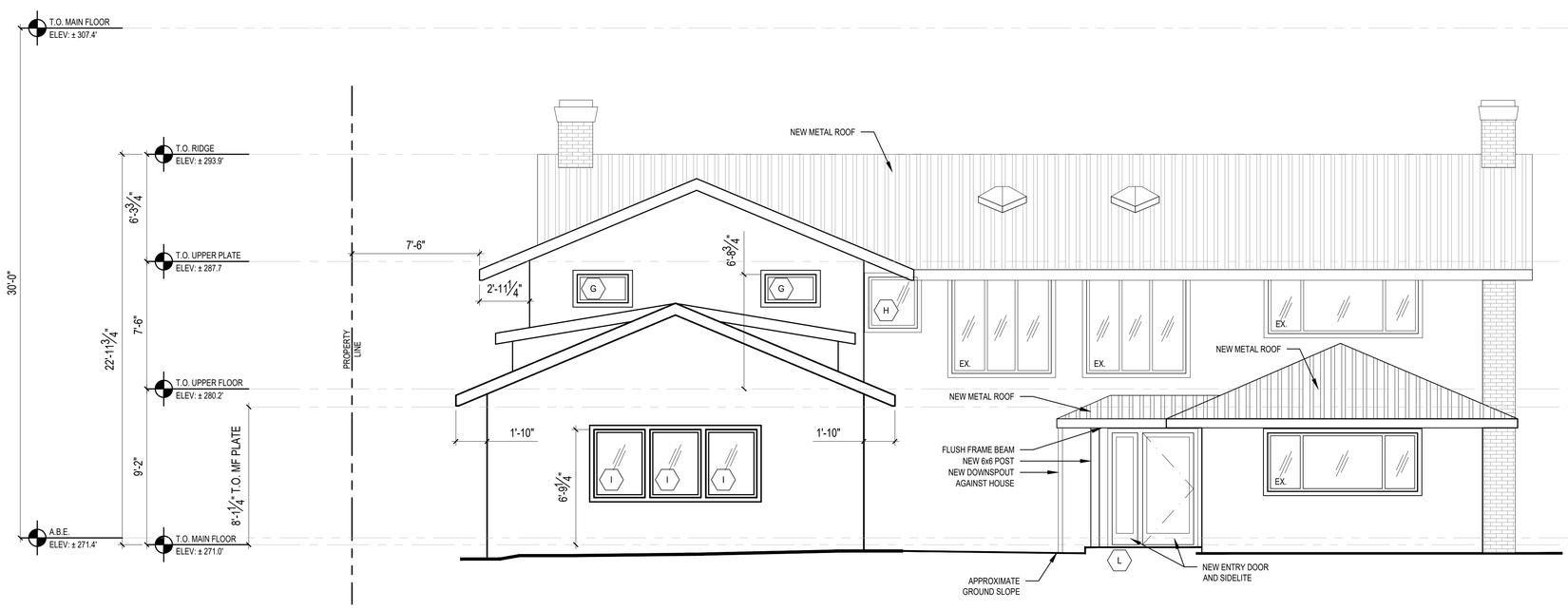

2 WEST ELEVATION

SCALE: 1/4" = 1'-0"

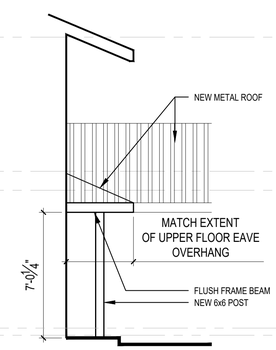

3 NORTH ENTRY ELEVATION

SCALE: 1/4" = 1'-0"

SCALE: IF SHEET IS LESS THAN 24" x 36", IT IS A REDUCED PRINT, REDUCE SCALE ACCORDINGLY

PERMIT SET		01/21/2021	
PLOT DATE:	1/21/2021	FILE NAME:	

STURMAN ARCHITECTS

TEL (425) 451-7003

9 103rd Avenue NE
Suite 203
Bellevue, WA 98004

5562 REGISTERED ARCHITECT
BRADLEY J. STURMAN
STATE OF WASHINGTON

www.sturmanarchitects.com

All Rights Reserved
© 2020

MORELLI RESIDENCE

8454 W MERCER WAY
MERCER ISLAND, WA 98040

EXTERIOR ELEVATIONS

REVISIONS:

DRAWN BY: JM

CHECKED BY: BJS

SHEET
A3.1

OF

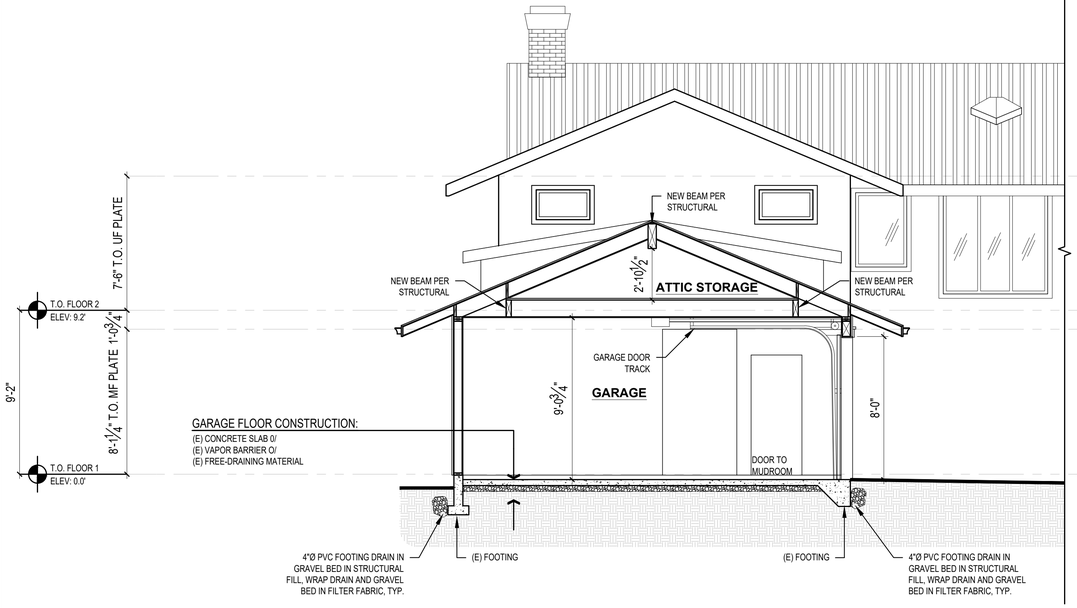

1 BUILDING SECTION
SCALE: 1/4" = 1'-0"

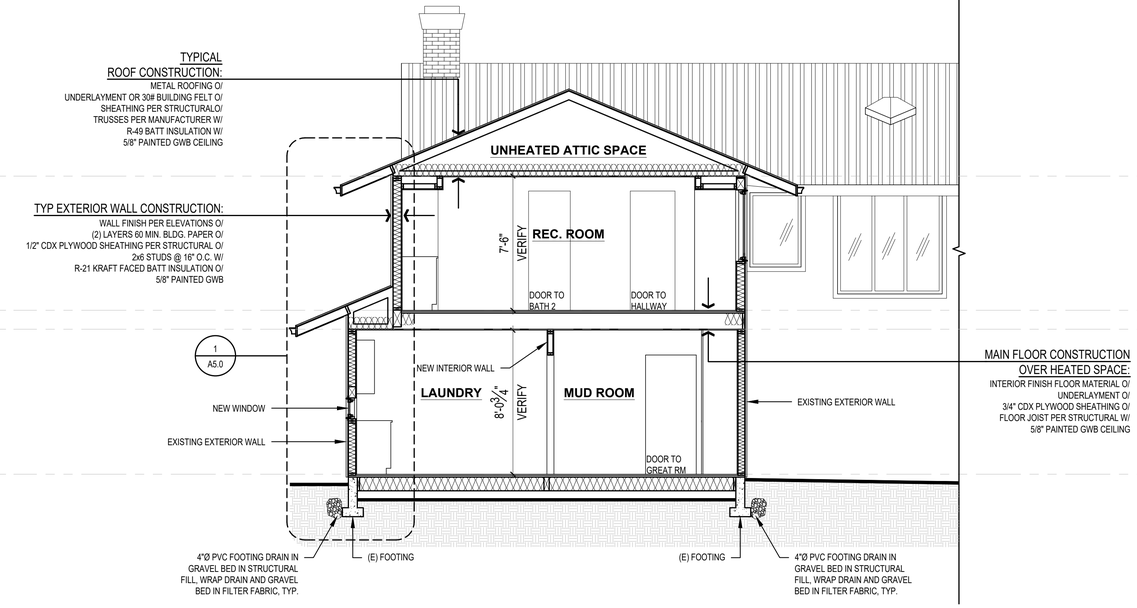

2 BUILDING SECTION
SCALE: 1/4" = 1'-0"

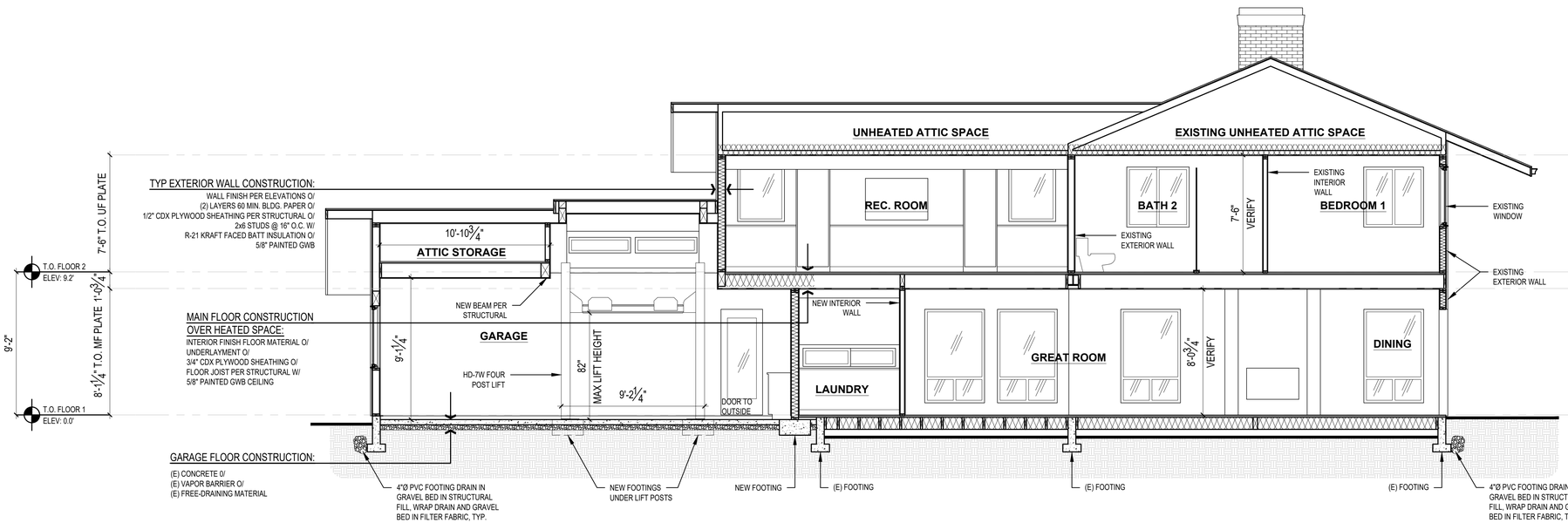

3 BUILDING SECTION
SCALE: 1/4" = 1'-0"

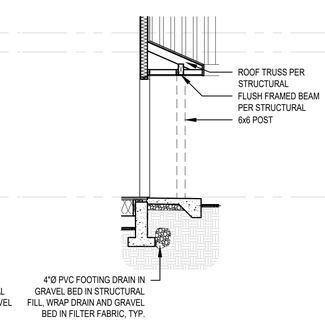

4 ENTRY SECTION
SCALE: 1/4" = 1'-0"

SCALE: IF SHEET IS LESS THAN 24" x 36", IT IS A REDUCED PRINT, REDUCE SCALE ACCORDINGLY

PERMIT SET	01/21/2021		
PLOT DATE: 1/21/2021		FILE NAME:	

STURMAN ARCHITECTS
TEL (425) 451-7003
9 103rd Avenue NE
Suite 203
Bellevue, WA 98004

5562 REGISTERED ARCHITECT
BRADLEY J. STURMAN
STATE OF WASHINGTON

www.sturmanarchitects.com
All Rights Reserved
© 2020

MORELLI RESIDENCE

8454 W MERCER WAY
MERCER ISLAND, WA 98040

BUILDING SECTIONS

REVISIONS:

DRAWN BY: JM

CHECKED BY: BJS

SHEET
A4.0
OF

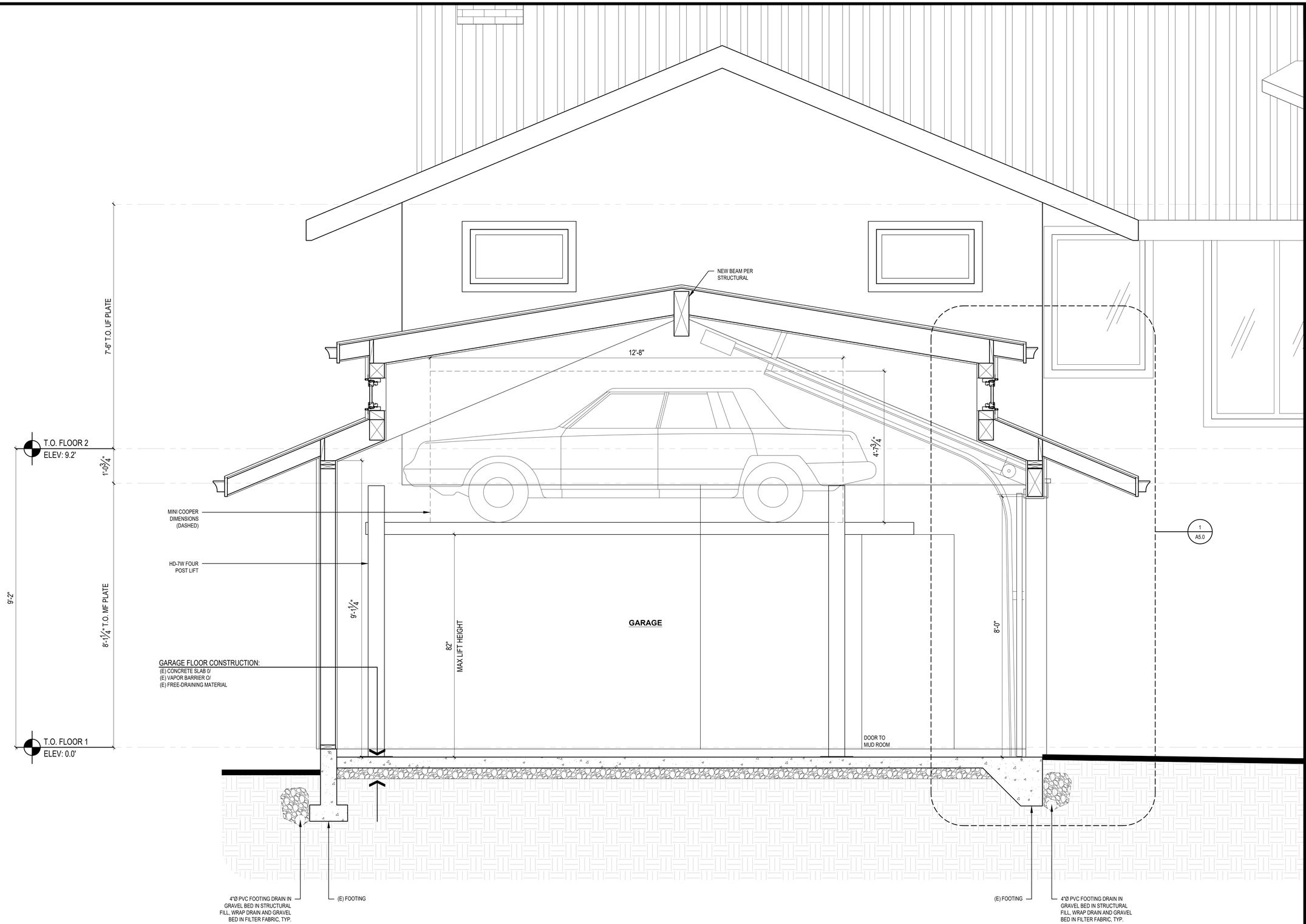

1 BUILDING SECTION

SCALE: 3/4" = 1'-0"

STURMAN ARCHITECTS

TEL (425) 451-7003

9 103rd Avenue NE
Suite 203
Bellevue, WA 98004

5562 REGISTERED ARCHITECT
BRADLEY J. STURMAN
STATE OF WASHINGTON

www.sturmanarchitects.com
All Rights Reserved
© 2020

MORELLI RESIDENCE

8454 W MERCER WAY
MERCER ISLAND, WA 98040

BUILDING SECTIONS

REVISIONS:

DRAWN BY: JM

CHECKED BY: BJS

SHEET A4.1

OF

SCALE: IF SHEET IS LESS THAN 24" x 36", IT IS A REDUCED PRINT, REDUCE SCALE ACCORDINGLY

PERMIT SET 01/21/2021

PLOT DATE: 1/21/2021 FILE NAME:

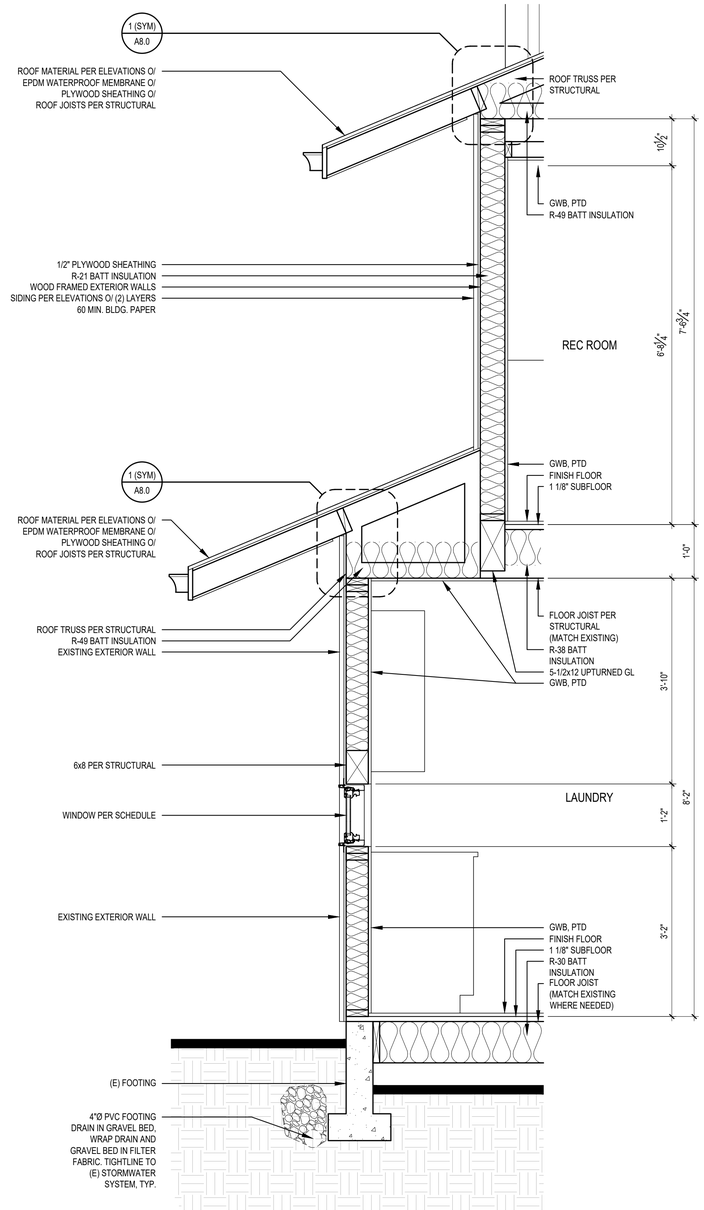

1 WALL SECTION

SCALE: 3/4" = 1'-0"

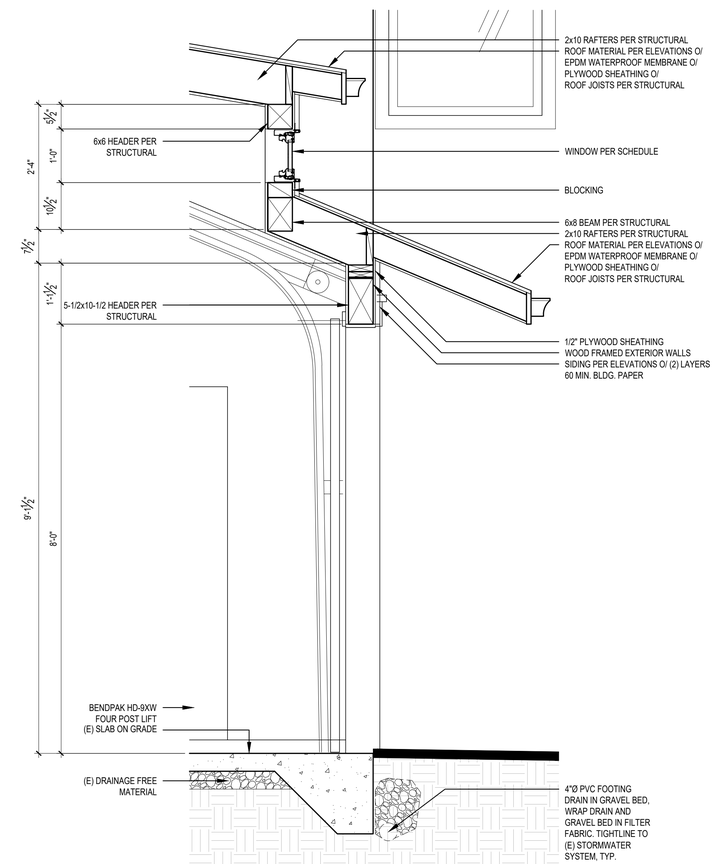

2 WALL SECTION

SCALE: 3/4" = 1'-0"

STURMAN
ARCHITECTS

TEL (425) 451-7003

9 103rd Avenue NE
Suite 203
Bellevue, WA 98004

5562
REGISTERED
ARCHITECT
BRADLEY J. STURMAN
STATE OF WASHINGTON

www.sturmanarchitects.com
All Rights Reserved
© 2020

MORELLI RESIDENCE

8454 W MERCER WAY
MERCER ISLAND, WA 98040

WALL SECTIONS

REVISIONS:

DRAWN BY: JM

CHECKED BY: BJS

SHEET
A5.0
OF

SCALE: IF SHEET IS LESS THAN 24" x 36", IT IS A REDUCED PRINT, REDUCE SCALE ACCORDINGLY

PERMIT SET 01/21/2021

PLOT DATE: 1/21/2021 FILE NAME:

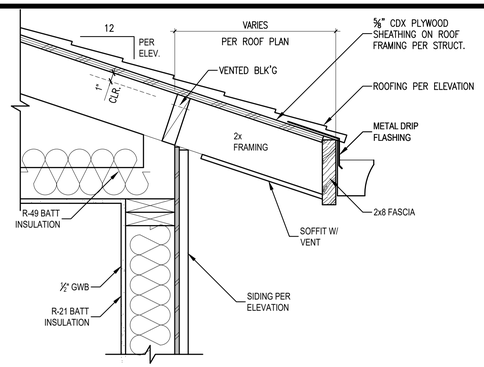

1 TYPICAL ROOF EAVE DETAIL

SCALE: 1 1/2" = 1'-0"

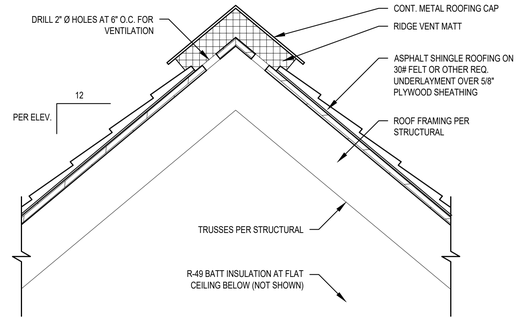

2 TYPICAL ROOF RIDGE VENT DETAIL

SCALE: 1 1/2" = 1'-0"

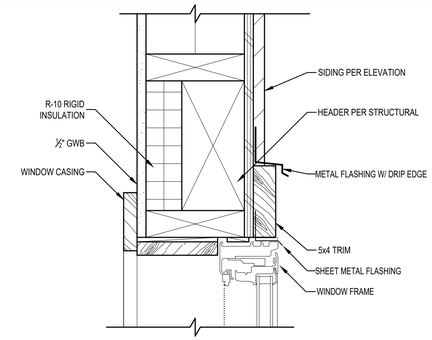

3 TYPICAL WINDOW HEAD DETAIL

SCALE: 3" = 1'-0"

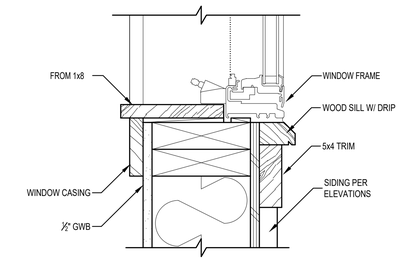

4 TYPICAL WINDOW SILL DETAIL

SCALE: 3" = 1'-0"

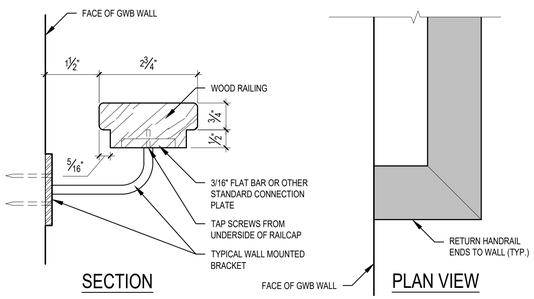

5 HANDRAIL DETAIL

SCALE: 6" = 1'-0"

SCALE: IF SHEET IS LESS THAN 24" x 36", IT IS A REDUCED PRINT, REDUCE SCALE ACCORDINGLY

PERMIT SET	01/21/2021
PLOT DATE: 1/21/2021	FILE NAME:

STURMAN ARCHITECTS

TEL (425) 451-7003

9 103rd Avenue NE
Suite 203
Bellevue, WA 98004

5562 REGISTERED ARCHITECT
BRADLEY J. STURMAN
STATE OF WASHINGTON

www.sturmanarchitects.com
All Rights Reserved
© 2020

MORELLI RESIDENCE

8454 W MERCER WAY
MERCER ISLAND, WA 98040

DETAILS

REVISIONS:

DRAWN BY: JM

CHECKED BY: BJS

SHEET

A8.0

OF

GENERAL STRUCTURAL NOTES

THE FOLLOWING APPLY UNLESS SHOWN OTHERWISE ON THE DRAWINGS

CRITERIA

1. ALL MATERIALS, WORKMANSHIP, DESIGN, AND CONSTRUCTION SHALL CONFORM TO THE DRAWINGS, SPECIFICATIONS, AND THE INTERNATIONAL BUILDING CODE (2015 EDITION).

2. DESIGN LOADING CRITERIA:
   RESIDENTIAL - ONE AND TWO-FAMILY DWELLINGS
   FLOOR LIVE LOAD . . . . . .
   . . . . . 40 PSF
   ROOF
   ROOF LIVE LOAD . . . . . .
   . . . . . 25 PSF
   ENVIRONMENTAL LOADS
   SNOW . . . . . Ce=1.0, Is=1.0,
   Ct=1.1, Pg=25 PSF, Pf=20 PSF
   WIND . . . . . GCpi=0.18, 110 MPH, RISK
   CATEGORY II, EXPOSURE "C"
   EARTHQUAKE . ANALYSIS PROCEDURE: EQUIVALENT
   LATERAL FORCE PROCEDURE
   LATERAL SYSTEM: LIGHT
   FRAMED SHEAR WALLS, Vs = 20 KIPS
   SITE CLASS=D, Ss=1.463,
   Sds=0.975, S1=0.556, SD1=0.556,
   Cs=0.150
   SDC D, Ie=1.0, R=6.5

3. STRUCTURAL DRAWINGS SHALL BE USED IN CONJUNCTION WITH ARCHITECTURAL DRAWINGS FOR BIDDING AND CONSTRUCTION. ARCHITECTURAL DRAWINGS ARE THE PRIME CONTRACT DRAWINGS. ANY DISCREPANCIES FOUND AMONG THE DRAWINGS, THE SPECIFICATION, THESE GENERAL NOTES AND THE SITE CONDITIONS SHALL BE REPORTED TO THE ARCHITECT, WHO SHALL CORRECT SUCH DISCREPANCY IN WRITING. ANY WORK DONE BY THE GENERAL CONTRACTOR AFTER DISCOVERY OF SUCH DISCREPANCY SHALL BE DONE AT THE GENERAL CONTRACTOR'S RISK.

4. PRIMARY STRUCTURAL ELEMENTS NOT DIMENSIONED ON THE STRUCTURAL PLANS AND DETAILS SHALL BE LOCATED BY THE ARCHITECTURAL PLANS AND DETAILS. VERTICAL DIMENSION CONTROL IS DEFINED BY THE ARCHITECTURAL WALL SECTIONS, BUILDING SECTION, AND PLANS. DETAILING AND SHOP DRAWING PRODUCTION FOR STRUCTURAL ELEMENTS WILL REQUIRE DIMENSIONAL INFORMATION CONTAINED IN BOTH ARCHITECTURAL AND STRUCTURAL DRAWINGS.

5. CONTRACTOR SHALL BE RESPONSIBLE FOR ALL SAFETY PRECAUTIONS AND THE METHODS, TECHNIQUES, SEQUENCES OR PROCEDURES REQUIRED TO PERFORM THE CONTRACTORS WORK. THE STRUCTURAL ENGINEER HAS NO OVERALL SUPERVISORY AUTHORITY OR ACTUAL AND/OR DIRECT RESPONSIBILITY FOR THE SPECIFIC WORKING CONDITIONS AT THE SITE AND/OR FOR ANY HAZARDS RESULTING FROM THE ACTIONS OF ANY TRADE CONTRACTOR. THE STRUCTURAL ENGINEER HAS NO DUTY TO INSPECT, SUPERVISE, NOTE, CORRECT, OR REPORT ANY HEALTH OR SAFETY DEFICIENCIES TO THE OWNER, CONTRACTORS, OR OTHER ENTITIES OR PERSONS AT THE PROJECT SITE.

6. CONTRACTOR SHALL PROVIDE TEMPORARY BRACING FOR THE STRUCTURE AND STRUCTURAL COMPONENTS UNTIL ALL FINAL CONNECTIONS HAVE BEEN COMPLETED IN ACCORDANCE WITH THE PLANS. CONFORM TO ASCE 37-14 "DESIGN LOADS ON STRUCTURES DURING CONSTRUCTION".

7. CONTRACTOR-INITIATED CHANGES SHALL BE SUBMITTED IN WRITING TO THE ARCHITECT AND STRUCTURAL ENGINEER FOR APPROVAL PRIOR TO FABRICATION OR CONSTRUCTION. CHANGES SHOWN ON SHOP DRAWINGS ONLY WILL NOT SATISFY THIS REQUIREMENT.

8. DRAWINGS INDICATE GENERAL AND TYPICAL DETAILS OF CONSTRUCTION. WHERE CONDITIONS ARE NOT SPECIFICALLY INDICATED BUT ARE OF SIMILAR CHARACTER TO DETAILS SHOWN, SIMILAR DETAILS OF CONSTRUCTION SHALL BE USED, SUBJECT TO REVIEW AND APPROVAL BY THE ARCHITECT AND THE STRUCTURAL ENGINEER. ALL TYPICAL NOTES AND DETAILS SHOWN ON DRAWINGS SHALL APPLY, UNLESS NOTED OTHERWISE. TYPICAL DETAILS MAY NOT NECESSARILY BE INDICATED ON THE PLANS BUT SHALL STILL APPLY AS SHOWN OR DESCRIBED IN THE DETAILS. WHERE TYPICAL DETAILS ARE NOTED ON THE PLANS, THE SPECIFIED TYPICAL DETAIL SHALL BE USED. WHERE NO TYPICAL DETAIL IS NOTED, IT SHALL BE THE CONTRACTOR'S RESPONSIBILITY TO CHOOSE THE APPROPRIATE TYPICAL DETAIL FROM THOSE PROVIDED OR REQUEST ADDITIONAL INFORMATION. THE CONTRACTOR SHALL SUBMIT ALL PROPOSED ALTERNATE TYPICAL DETAILS TO THOSE PROVIDED WITH RELATED CALCULATIONS TO THE ENGINEER FOR APPROVAL PRIOR TO SHOP DRAWING PRODUCTION AND FIELD USE.

QUALITY ASSURANCE

9. SPECIAL INSPECTION SHALL BE PROVIDED IN ACCORDANCE WITH THE PROJECT SPECIFICATIONS AND SECTIONS 110 AND 1705 OF THE INTERNATIONAL BUILDING CODE BY A QUALIFIED TESTING AGENCY DESIGNATED BY THE ARCHITECT, AND RETAINED BY THE BUILDING OWNER. THE ARCHITECT, STRUCTURAL ENGINEER, AND BUILDING DEPARTMENT SHALL BE FURNISHED WITH COPIES OF ALL INSPECTION AND TEST RESULTS. SPECIAL INSPECTION OF THE FOLLOWING TYPES OF CONSTRUCTION IS REQUIRED UNLESS NOTED OTHERWISE.

   STRUCTURAL STEEL FABRICATION AND ERECTION
   PER AISC 360
   EXPANSION BOLTS AND THREADED EXPANSION INSERTS
   PER MANUFACTURER
   EPOXY GROUTED INSTALLATIONS
   PER MANUFACTURER

   PERIODIC INSPECTION: INSPECTION SHALL BE PERFORMED AT INTERVALS NECESSARY TO CONFIRM THAT WORK REQUIRING SPECIAL INSPECTION IS IN COMPLIANCE WITH REQUIREMENTS.
   CONTINUOUS INSPECTION: INSPECTOR SHALL BE ONSITE AND OBSERVE THE WORK REQUIRING INSPECTION AT ALL TIMES THAT WORK IS PERFORMED.

10. UNLESS OTHERWISE NOTED, THE FOLLOWING ELEMENTS COMPRISE THE SEISMIC-FORCE-RESISTING SYSTEM AND ARE SUBJECT TO SPECIAL INSPECTION FOR SEISMIC RESISTANCE IN ACCORDANCE WITH SECTION 1705.12 OF THE INTERNATIONAL BUILDING CODE.

    A. STRUCTURAL WOOD SHEAR WALL SYSTEMS REQUIRE PERIODIC INSPECTION FOR FIELD GLUEING, NAILING, BOLTING, ANCHORING AND OTHER FASTENING OF COMPONENTS WITHIN THE SEISMIC FORCE, RESISTING SYSTEM INCLUDING SHEAR WALLS, DIAPHRAGMS, DRAG STRUTS, BRACES AND HOLDOWNS.

GEOTECHNICAL

11. FOUNDATION NOTES: ALLOWABLE SOIL PRESSURE AND LATERAL EARTH PRESSURE ARE ASSUMED AND THEREFORE MUST BE VERIFIED BY A QUALIFIED SOILS ENGINEER OR APPROVED BY THE BUILDING OFFICIAL. IF SOILS ARE FOUND TO BE OTHER THAN ASSUMED, NOTIFY THE STRUCTURAL ENGINEER FOR POSSIBLE FOUNDATION REDESIGN.

    FOOTINGS SHALL BEAR ON FIRM, UNDISTURBED EARTH AT LEAST 18" BELOW ADJACENT FINISHED GRADE. UNLESS OTHERWISE NOTED, FOOTINGS SHALL BE CENTERED BELOW COLUMNS OR WALLS ABOVE.

    ALLOWABLE SOIL PRESSURE. . . . . .
    . . . . . 1500 PSF

RENOVATION

12. DEMOLITION: CONTRACTOR SHALL VERIFY ALL EXISTING CONDITIONS BEFORE COMMENCING ANY DEMOLITION. SHORING SHALL BE INSTALLED TO SUPPORT EXISTING CONSTRUCTION AS REQUIRED AND IN A MANNER SUITABLE TO THE WORK SEQUENCES. DEMOLITION DEBRIS SHALL NOT BE ALLOWED TO DAMAGE OR OVERLOAD THE EXISTING STRUCTURE. LIMIT CONSTRUCTION LOADING (INCLUDING DEMOLITION DEBRIS) ON EXISTING FLOOR SYSTEMS TO 40 PSF.

13. CONTRACTOR SHALL VERIFY ALL EXISTING DIMENSIONS, MEMBER SIZES, AND CONDITIONS PRIOR TO COMMENCING ANY WORK. ALL DIMENSIONS OF EXISTING CONSTRUCTION SHOWN ON THE DRAWINGS ARE INTENDED AS GUIDELINES ONLY AND MUST BE VERIFIED. THE CONTRACTOR SHALL NOTIFY THE ARCHITECT AND STRUCTURAL ENGINEER IF EXISTING CONDITIONS DETERMINED DURING WORK VARY FROM THE EXISTING CONSTRUCTION SHOWN ON THE DRAWINGS.

14. CONTRACTOR SHALL CHECK FOR DRY ROT AT ALL AREAS OF NEW WORK. ALL ROT SHALL BE REMOVED AND DAMAGED MEMBERS SHALL BE REPLACED OR REPAIRED AS DIRECTED BY THE STRUCTURAL ENGINEER OR ARCHITECT.

CONCRETE

15. CONCRETE SHALL BE MIXED, PROPORTIONED, CONVEYED AND PLACED IN ACCORDANCE WITH ACI 301, INCLUDING TESTING PROCEDURES. CONCRETE SHALL ATTAIN A 28-DAY STRENGTH OF f'c = 3,000 PSI AND MIX SHALL CONTAIN NOT LESS THAN 5-1/2 SACKS OF CEMENT PER CUBIC YARD AND SHALL BE PROPORTIONED TO PRODUCE A SLUMP OF 5" OR LESS. REQUIRED CONCRETE STRENGTH IS BASED ON THE DURABILITY REQUIREMENTS OF SECTION 1904 OF THE IBC. DESIGN STRENGTH IS f'c = 2,500 PSI.

16. ALL CONCRETE WITH SURFACES EXPOSED TO WEATHER OR STANDING WATER SHALL BE AIR-ENTRAINED WITH AN AIR-ENTRAINING AGENT CONFORMING TO ASTM C260, C494, AND C618. TOTAL AIR CONTENT FOR FROST-RESISTANT CONCRETE SHALL BE IN ACCORDANCE WITH ACI 318-14, TABLE 19.3.2.1 MODERATE EXPOSURE, F1.

17. REINFORCING STEEL SHALL CONFORM TO ASTM A615 (INCLUDING SUPPLEMENT S1), GRADE 60, FY = 60,000 PSI.

18. CONCRETE PROTECTION (COVER) FOR REINFORCING STEEL SHALL BE AS FOLLOWS:

    FOOTINGS AND OTHER UNFORMED SURFACES CAST AGAINST AND PERMANENTLY EXPOSED
    TO EARTH . . . . . .
    . . . . . 3"
    FORMED SURFACES EXPOSED TO EARTH OR WEATHER (#6 BARS OR LARGER) . . . . 2"
    FORMED SURFACES EXPOSED TO EARTH OR WEATHER (#5 BARS OR SMALLER). . 1-1/2"
    SLABS AND WALLS (INT. FACE). . . GREATER OF BAR DIAMETER PLUS 1/8" OR 3/4"

19. CONCRETE WALL REINFORCING--PROVIDE THE FOLLOWING UNLESS DETAILED OTHERWISE:

6" WALLS	#4 @ 16 HORIZ.	#4 @ 18 VERTICAL	1 CURTAIN
8" WALLS	#4 @ 12 HORIZ.	#4 @ 18 VERTICAL	1 CURTAIN

20. CAST-IN-PLACE CONCRETE: SEE ARCHITECTURAL DRAWINGS FOR EXACT LOCATIONS AND DIMENSIONS OF DOOR AND WINDOW OPENINGS IN ALL CONCRETE WALLS. SEE MECHANICAL DRAWINGS FOR SIZE AND LOCATION OF MISCELLANEOUS MECHANICAL OPENINGS THROUGH CONCRETE WALLS. SEE ARCHITECTURAL DRAWINGS FOR ALL GROOVES, NOTCHES, CHAMFERS, FEATURE STRIPS, COLOR, TEXTURE, AND OTHER FINISH DETAILS AT ALL EXPOSED CONCRETE SURFACES, BOTH CAST-IN-PLACE AND PRECAST.

21. NON-SHRINK GROUT SHALL BE FURNISHED BY AN APPROVED MANUFACTURER AND SHALL BE MIXED AND PLACED IN STRICT ACCORDANCE WITH THE MANUFACTURER'S PUBLISHED RECOMMENDATIONS. GROUT STRENGTH SHALL BE AT LEAST EQUAL TO THE MATERIAL ON WHICH IT IS PLACED (3000 PSI MINIMUM).

ANCHORAGE

22. EXPANSION BOLTS INTO CONCRETE SHALL BE "STRONG-BOLT 2" WEDGE ANCHORS AS MANUFACTURED BY THE SIMPSON STRONG TIE COMPANY AND INSTALLED IN STRICT CONFORMANCE TO ICC-ES REPORT NUMBER ESR-3037, INCLUDING MINIMUM EMBEDMENT REQUIREMENTS. BOLTS INTO CONCRETE MASONRY OR BRICK MASONRY UNITS SHALL BE INTO FULLY GROUTED CELLS. PERIODIC SPECIAL INSPECTION IS REQUIRED TO VERIFY ANCHOR TYPE, ANCHOR DIMENSIONS, ANCHOR LOCATION, TIGHTENING TORQUE, HOLE DIMENSIONS, ANCHOR EMBEDMENT, AND ADHERENCE TO THE INSTALLATION INSTRUCTIONS.

23. EPOXY-GROUTED ITEMS (THREADED RODS OR REINFORCING BAR) SPECIFIED ON THE DRAWINGS SHALL BE INSTALLED USING "SET-XP" HIGH STRENGTH EPOXY AS MANUFACTURED BY THE SIMPSON STRONG, TIE COMPANY. INSTALL IN STRICT ACCORDANCE WITH ICC-ES REPORT NO. ESR-2508. MINIMUM BASE MATERIAL TEMPERATURE IS 50 DEGREES, F. RODS SHALL BE ASTM A-36 UNLESS OTHERWISE NOTED. PERIODIC SPECIAL INSPECTION OF INSTALLATION IS REQUIRED TO VERIFY ANCHOR OR EMBEDED BAR TYPE AND DIMENSIONS, LOCATION, ADHESIVE IDENTIFICATION AND EXPIRATION, HOLE DIMENSIONS, HOLE CLEANING PROCEDURE, ANCHOR EMBEDMENT, AND ADHERENCE TO THE INSTALLATION INSTRUCTIONS. CONTINUOUS SPECIAL INSPECTION IS REQUIRED FOR HORIZONTAL AND OVERHEAD INSTALLATIONS.

24. CONCRETE SCREW ANCHORS INTO CONCRETE AND CONCRETE MASONRY UNITS SHALL BE "TITEN HD" HEAVY DUTY SCREW ANCHOR AS MANUFACTURED BY THE SIMPSON STRONG-TIE COMPANY, INSTALLED IN STRICT ACCORDANCE WITH ICC-ES REPORT NO. ESR-2713 (CONCRETE) NO. ESR-1056 (CMU), INCLUDING MINIMUM EMBEDMENT REQUIREMENTS. SCREW ANCHORS INTO CONCRETE MASONRY UNITS SHALL BE INTO FULLY GROUTED CELLS. SPECIAL INSPECTION IS REQUIRED.

STEEL

25. STRUCTURAL STEEL DESIGN, FABRICATION, AND ERECTION SHALL BE BASED ON:

    A. AISC 360 AND SECTION 2205.2 OF THE INTERNATIONAL BUILDING CODE.
    B. APRIL 14, 2010 AISC CODE OF STANDARD PRACTICE FOR STEEL BUILDINGS AND BRIDGES AMENDED AS FOLLOWS: AS NOTED IN THE CONTRACT DOCUMENTS, BY THE DELETION OF PARAGRAPH 4.4.1, AND REVISE REFERENCE FROM "STRUCTURAL DESIGN DRAWINGS" TO "CONTRACT DOCUMENTS" IN PARAGRAPH 3.1.
    C. SPECIFICATION FOR STRUCTURAL JOINTS USING ASTM A325 OR A490 BOLTS.

26. WIDE FLANGE SHAPES SHALL CONFORM TO ASTM A992, FY = 50 KSI. OTHER ROLLED SHAPES INCLUDING PLATES, SHALL CONFORM TO ASTM A36, FY = 36 KSI. STEEL PIPE SHALL CONFORM TO ASTM A-53, TYPE E OR S, GRADE B, Fy = 35 KSI. STRUCTURAL TUBING SHALL CONFORM TO ASTM A500, GRADE B, FY = 42 KSI (ROUND), FY = 46 KSI (SQUARE AND RECTANGULAR). CONNECTION BOLTS SHALL CONFORM TO ASTM A307.

27. ALL A-325N CONNECTION BOLTS NEED ONLY BE TIGHTENED TO A SNUG TIGHT CONDITION, DEFINED AS THE TIGHTNESS THAT EXISTS WHEN ALL PLIES IN A JOINT ARE IN FIRM CONTACT. THIS MAY BE ATTAINED BY A FEW IMPACTS OF AN IMPACT WRENCH OR THE FULL EFFORT OF AN IRONWORKER USING AN ORDINARY SPUD WRENCH.

28. ALL ANCHORS EMBEDDED IN MASONRY OR CONCRETE SHALL BE A307 HEADED BOLTS OR A36 THREADED ROD WITH AN ASTM 563 HEAVY HEX NUT TACK WELDED ON THE EMBEDDED END.

29. ALL WELDING SHALL BE IN CONFORMANCE WITH AISC AND AWS STANDARDS AND SHALL BE PERFORMED BY WABO CERTIFIED WELDERS USING E70XX ELECTRODES. ONLY PREQUALIFIED WELDS (AS DEFINED BY AWS) SHALL BE USED. ALL COMPLETE JOINT PENETRATION GROOVE WELDS SHALL BE MADE WITH A FILLER MATERIAL THAT HAS A MINIMUM CVN TOUGHNESS OF 20 FT-LBS AT -20 DEGREES F AND 40 FT - LBS AT 70 DEGREES F, AS DETERMINED BY AWS CLASSIFICATION OR MANUFACTURER CERTIFICATION.

WOOD

30. FRAMING LUMBER SHALL BE S-DRY, KD, OR MC-19, AND GRADED AND MARKED IN CONFORMANCE WITH WCLIB STANDARD "GRADING RULES FOR WEST COAST LUMBER NO. 17", OR WWPA STANDARD, "WESTERN LUMBER GRADING RULES 2011". FURNISH TO THE FOLLOWING MINIMUM STANDARDS:

    JOISTS (2X & 3X MEMBERS) HEM-FIR NO. 2
    AND BEAMS MINIMUM
    BASE VALUE, Fb = 850 PSI

    (4X MEMBERS) DOUGLAS
    FIR-LARCH NO. 1 MINIMUM
    BASE VALUE, Fb = 1000 PSI

    BEAMS (INCL. 6X AND LARGER) DOUGLAS
    FIR-LARCH NO. 1 MINIMUM
    BASE VALUE, Fb = 1350 PSI

    POSTS (4X MEMBERS) DOUGLAS
    FIR-LARCH NO. 2 MINIMUM
    BASE VALUE, Fc = 1350 PSI

    (6X AND LARGER) DOUGLAS
    FIR-LARCH NO. 1 MINIMUM
    BASE VALUE, Fc = 1000 PSI

    STUDS, PLATES & MISC. FRAMING: DOUGLAS
    FIR-LARCH NO. 2 OR
    HEM-FIR NO. 2

31. GLUED LAMINATED MEMBERS SHALL BE FABRICATED IN CONFORMANCE WITH ASTM AND ANSI/AITC STANDARDS. EACH MEMBER SHALL BEAR AN AITC OR APA-EWS IDENTIFICATION MARK AND SHALL BE ACCOMPANIED BY AN AITC OR APA-EWS CERTIFICATE OF CONFORMANCE. ALL SIMPLE SPAN BEAMS SHALL BE DOUGLAS FIR COMBINATION 24F-V4, Fb = 2,400 PSI, Fv =265 PSI. ALL CANTILEVERED BEAMS SHALL BE DOUGLAS FIR COMBINATION 24F-V8, Fb = 2400 PSI, Fv = 265 PSI. CAMBER ALL SIMPLE SPAN GLULAM BEAMS, WITH SPANS OVER 30', TO 3,500' RADIUS, UNLESS SHOWN OTHERWISE ON THE PLANS.

32. MANUFACTURED LUMBER, PSL, LVL, AND LSL SHOWN ON PLAN ARE BASED PRODUCTS MANUFACTURED BY THE WEYERHAEUSER CORPORATION IN ACCORDANCE WITH ICC-ES REPORT ESR-1387. MEMBERS SHALL HAVE THE FOLLOWING MINIMUM PROPERTIES:

    PSL (2.0E) Fb = 2900 PSI, E = 2000 KSI,
    Fv = 290 PSI
    LVL (2.0E) Fb = 2600 PSI, E = 2000 KSI,
    Fv = 285 PSI
    LSL (1.55E) Fb = 2325 PSI, E = 1550 KSI,
    Fv = 310 PSI

    ALTERNATE MANUFACTURED LUMBER MANUFACTURERS MAY BE USED SUBJECT TO REVIEW AND APPROVAL BY THE ARCHITECT AND STRUCTURAL ENGINEER. ALTERNATE MANUFACTURER'S PRODUCTS SHALL BE COMPATIBLE WITH THE JOIST HANGERS AND OTHER HARDWARE SPECIFIED ON PLANS, OR ALTERNATE HANGERS AND HARDWARE SHALL SUBMITTED FOR REVIEW AND APPROVAL. SUBSTITUTED ITEMS SHALL HAVE ICC-ES REPORT APPROVAL FOR EQUAL OR GREATER LOAD CAPACITIES.

    MANUFACTURED LUMBER PRODUCTS SHALL BE INSTALLED WITH A MOISTURE CONTENT OF 12% OR LESS. THE CONTRACTOR SHALL MAKE PROVISIONS DURING CONSTRUCTION TO PREVENT THE MOISTURE CONTENT OF INSTALLED BEAMS FROM EXCEEDING 12%. EXCESSIVE DEFLECTIONS MAY OCCUR IF MOISTURE CONTENT EXCEEDS THIS VALUE.

33. PREFABRICATED CONNECTOR PLATE WOOD ROOF TRUSSES SHALL BE DESIGNED BY THE MANUFACTURER IN ACCORDANCE WITH THE "NATIONAL DESIGN STANDARD FOR METAL PLATE-CONNECTED WOOD TRUSS CONSTRUCTION, ANSI/TPI 1" BY THE TRUSS PLATE INSTITUTE FOR THE SPANS AND CONDITIONS SHOWN ON THE PLANS. LOADING SHALL BE AS FOLLOWS:

    TOP CHORD LIVE LOAD 25 PSF
    TOP CHORD DEAD LOAD 10 PSF
    BOTTOM CHORD DEAD LOAD 5 PSF
    TOTAL LOAD 40 PSF

    WIND UPLIFT (TOP CHORD) 5 PSF
    BOTTOM CHORD LIVE LOAD 10 PSF
    (BOTTOM CHORD LIVE LOAD DOES NOT ACT CONCURRENTLY WITH THE ROOF LIVE LOAD)

    WOOD TRUSSES SHALL UTILIZE APPROVED CONNECTOR PLATES (GANGNAIL OR EQUAL). SUBMIT SHOP DRAWINGS AND DESIGN CALCULATIONS TO THE ARCHITECT AND STRUCTURAL ENGINEER FOR REVIEW PRIOR TO FABRICATION. SUBMITTED DOCUMENTS SHALL BE SIGNED AND STAMPED BY A STRUCTURAL ENGINEER REGISTERED IN THE STATE OF WASHINGTON. PROVIDE FOR SHAPES, BEARING POINTS, INTERSECTIONS, HIPS, VALLEYS, ETC., SHOWN ON THE DRAWINGS. EXACT COMPOSITION OF SPECIAL HIP, VALLEY, AND INTERSECTION AREAS (USE OF GIRDER TRUSSES, JACK TRUSSES, STEP-DOWN TRUSSES, ETC.) SHALL BE DETERMINED BY THE MANUFACTURER UNLESS SPECIFICALLY INDICATED ON THE PLANS. PROVIDE ALL TRUSS TO TRUSS AND TRUSS TO GIRDER TRUSS CONNECTION DETAILS AND REQUIRED CONNECTION MATERIALS. PROVIDE FOR ALL TEMPORARY AND PERMANENT TRUSS BRACING AND BRIDGING.

34. PLYWOOD SHEATHING SHALL BE GRADE C-D, EXTERIOR GLUE OR STRUCTURAL II, EXTERIOR GLUE IN CONFORMANCE WITH DOC PS 1 OR PS 2. ORIENTED STRAND BOARD OF EQUIVALENT THICKNESS, EXPOSURE RATING AND PANEL INDEX MAY BE USED IN LIEU OF PLYWOOD.

    ROOF SHEATHING SHALL BE 1/2" (NOMINAL) WITH SPAN RATING 32/16.

    FLOOR SHEATHING SHALL BE 3/4" (NOMINAL) WITH SPAN RATING 48/24.

    WALL SHEATHING SHALL BE 1/2" (NOMINAL) WITH SPAN RATING 24/0.

    PROVIDE APPROVED PLYWOOD EDGE CLIPS CENTERED BETWEEN JOISTS/TRUSSES AT UNBLOCKED ROOF SHEATHING EDGES. ALL FLOOR SHEATHING EDGES SHALL HAVE APPROVED T&G JOINTS OR SHALL BE SUPPORTED WITH SOLID BLOCKING. ALLOW 1/8" SPACING AT ALL PANEL EDGES AND ENDS OF FLOOR AND ROOF SHEATHING.

    REFER TO WOOD FRAMING NOTES BELOW FOR TYPICAL NAILING REQUIREMENTS.

35. ALL WOOD IN DIRECT CONTACT WITH CONCRETE OR MASONRY SHALL BE PRESSURE-TREATED WITH AN APPROVED PRESERVATIVE OR (2) LAYERS OF ASPHALT IMPREGNATED BUILDING PAPER SHALL BE PROVIDED BETWEEN UNTREATED WOOD AND CONCRETE OR MASONRY.

36. PRESERVATIVE TREATED WOOD SHALL BE TREATED PER AWPA STANDARD U1 TO THE USE CATEGORY EQUAL TO OR HIGHER THAN THE INTENDED APPLICATION. TREATED WOOD FOR ABOVE GROUND USE SHALL BE TREATED TO AWPA UC3B. WOOD IN CONTINUOUS CONTACT WITH FRESH WATER OR SOIL SHALL BE TREATED TO AWPA UC4A. WOOD FOR USE IN PERMANENT FOUNDATIONS SHALL BE TREATED TO AWPA UC4B.

37. FASTENERS AND TIMBER CONNECTORS USED WITH TREATED WOOD SHALL HAVE CORROSION RESISTANCE AS INDICATED IN THE FOLLOWING TABLE, UNLESS OTHERWISE NOTED.

WOOD TREATMENT	CONDITION
PROTECTION	
HAS NO AMMONIA CARRIER	INTERIOR DRY
G90 GALVANIZED	
CONTAINS AMMONIA CARRIER	INTERIOR DRY
G185 OR A185 HOT DIPPED OR	
CONTINUOUS HOT-GALVANIZED	
PER ASTM A653	
CONTAINS AMMONIA CARRIER	INTERIOR WET
TYPE 304 OR 316 STAINLESS	
CONTAINS AMMONIA CARRIER	EXTERIOR
TYPE 304 OR 316 STAINLESS	
AZCA	ANY
TYPE 304 OR 316 STAINLESS	

    INTERIOR DRY CONDITIONS SHALL HAVE WOOD MOISTURE CONTENT LESS THAN 19%. WOOD MOISTURE CONTENT IN OTHER CONDITIONS (INTERIOR WET, EXTERIOR WET, AND EXTERIOR DRY) IS EXPECTED TO EXCEED 19%. CONNECTORS AND THEIR FASTENERS SHALL BE THE SAME MATERIAL. COMPLY WITH THE TREATMENT MANUFACTURERS RECOMMENDATIONS FOR PROTECTION OF METAL.

38. TIMBER CONNECTORS CALLED OUT BY LETTERS AND NUMBERS SHALL BE "STRONG-TIE" BY SIMPSON COMPANY, AS SPECIFIED IN THEIR CATALOG NUMBER C-C-2019. EQUIVALENT DEVICES BY OTHER MANUFACTURERS MAY BE SUBSTITUTED, PROVIDED THEY HAVE ICC-ES APPROVAL FOR EQUAL OR GREATER LOAD CAPACITIES. PROVIDE NUMBER AND SIZE OF FASTENERS AS SPECIFIED BY MANUFACTURER FOR MAXIMUM LOAD CARRYING CAPACITY. CONNECTORS SHALL BE INSTALLED IN ACCORDANCE WITH THE MANUFACTURER'S RECOMMENDATIONS.

    ALL 2X JOISTS SHALL BE CONNECTED TO FLUSH BEAMS WITH "LUS" SERIES JOIST HANGERS. ALL TJI JOISTS SHALL BE CONNECTED TO FLUSH BEAMS WITH "ITS" SERIES JOIST HANGERS. ALL DOUBLE-JOIST BEAMS SHALL BE CONNECTED TO FLUSH BEAMS WITH "MIT" SERIES JOIST HANGERS.

    WHERE CONNECTOR STRAPS CONNECT TWO MEMBERS, PLACE ONE-HALF OF THE NAILS OR BOLTS IN EACH MEMBER.

    ALL SHIMS SHALL BE SEASONED AND DRIED AND THE SAME GRADE (MINIMUM) AS MEMBERS CONNECTED.

39. WOOD FASTENERS

    A. NAIL SIZES SPECIFIED ON DRAWINGS ARE BASED ON THE FOLLOWING SPECIFICATIONS:

SIZE	LENGTH	DIAMETER
8d	2-1/2"	0.131"
16d BOX	3-1/2"	0.135"

    IF CONTRACTOR PROPOSES THE USE OF ALTERNATE NAILS, THEY SHALL SUBMIT NAIL SPECIFICATIONS TO THE STRUCTURAL ENGINEER (PRIOR TO CONSTRUCTION) FOR REVIEW AND APPROVAL.

    NAILS - PLYWOOD (APA RATED SHEATHING) FASTENERS TO FRAMING SHALL BE DRIVEN FLUSH TO FACE OF SHEATHING WITH NO COUNTERSINKING PERMITTED. TOE-NAILS SHALL BE DRIVEN AT AN ANGLE OF 30 DEGREES WITH THE MEMBER AND STARTED 1/3 THE LENGTH OF THE NAIL FROM THE MEMBER END.

    B. ALL BOLTS IN WOOD MEMBERS SHALL CONFORM TO ASTM A307. PROVIDE WASHERS UNDER THE HEADS AND NUTS OF ALL BOLTS AND LAG BOLTS BEARING ON WOOD. INSTALLATION OF LAG BOLTS SHALL CONFORM TO THE NATIONAL DESIGN SPECIFICATION FOR WOOD CONSTRUCTION WITH A LEAD BORE HOLE OF 60 TO 70 PERCENT OF THE SHANK DIAMETER. LEAD HOLES ARE NOT REQUIRED FOR 3/8" AND SMALLER LAG SCREWS.

40. NOTCHES AND HOLES IN WOOD FRAMING:

    A. NOTCHES ON THE ENDS OF SOLID SAWN JOISTS AND RAFTERS SHALL NOT EXCEED ONE-FOURTH THE JOIST DEPTH. NOTCHES IN THE TOP OR BOTTOM OF SOLID SAWN JOISTS SHALL NOT EXCEED ONE-SIXTH THE DEPTH AND SHALL NOT BE LOCATED IN THE MIDDLE THIRD OF THE SPAN. HOLES BORED IN SOLID SAWN JOISTS AND RAFTERS SHALL NOT BE WITHIN 2 INCHES OF THE TOP OR BOTTOM OF THE JOIST, AND THE DIAMETER OF ANY SUCH HOLE SHALL NOT EXCEED ONE-THIRD THE DEPTH OF THE JOIST.

    B. IN EXTERIOR WALLS AND BEARING PARTITIONS, ANY WOOD STUD IS PERMITTED TO BE CUT OR NOTCHED TO A DEPTH NOT EXCEEDING 25 PERCENT OF ITS WIDTH. A HOLE NOT GREATER IN DIAMETER THAN 40 PERCENT OF THE STUD WIDTH IS PERMITTED TO BE BORED IN ANY WOOD STUD. IN NO CASE SHALL THE EDGE OF THE BORED HOLE BE NEARER THAN 5/8 INCH TO THE EDGE OF THE STUD. BORED HOLES SHALL NOT BE LOCATED AT THE SAME SECTION OF STUD AS A CUT OR NOTCH.

    C. NOTCHES AND HOLES IN MANUFACTURED LUMBER AND PREFABRICATED PLYWOOD WEB JOISTS SHALL BE PER THE MANUFACTURERS RECOMMENDATIONS UNLESS OTHERWISE NOTED.

41. WOOD FRAMING NOTES--THE FOLLOWING APPLY UNLESS OTHERWISE SHOWN ON THE PLANS:

    A. ALL WOOD FRAMING DETAILS NOT SHOWN OTHERWISE SHALL BE CONSTRUCTED TO THE MINIMUM STANDARDS OF THE INTERNATIONAL BUILDING CODE, THE AITC "TIMBER CONSTRUCTION MANUAL" AND THE AWC "NATIONAL DESIGN SPECIFICATION FOR WOOD CONSTRUCTION". MINIMUM NAILING, UNLESS OTHERWISE NOTED, SHALL CONFORM TO IBC TABLE 2304.10.1. COORDINATE THE SIZE AND LOCATION OF ALL OPENINGS WITH MECHANICAL AND ARCHITECTURAL DRAWINGS.

    B. WALL FRAMING: REFER ARCHITECTURAL DRAWINGS FOR THE SIZE OF ALL WALLS. ALL STUDS SHALL BE SPACED AT 16" O.C. UNO. TWO STUDS MINIMUM SHALL BE PROVIDED AT THE END OF ALL WALLS AND AT EACH SIDE OF ALL OPENINGS, AND AT BEAM OR HEADER BEARING LOCATIONS. TWO 2x8 HEADERS SHALL BE PROVIDED OVER ALL OPENINGS NOT OTHERWISE NOTED. SOLID BLOCKING FOR WOOD COLUMNS SHALL BE PROVIDED THROUGH FLOORS TO SUPPORTS BELOW. PROVIDE CONTINUOUS SOLID BLOCKING AT MID-HEIGHT OF ALL STUD WALLS OVER 10'-0" IN HEIGHT.

    ALL WALLS SHALL HAVE A SINGLE BOTTOM PLATE AND A DOUBLE TOP PLATE. END NAIL TOP PLATE TO EACH STUD WITH TWO 16d NAILS, AND TOENAIL OR END NAIL EACH STUD TO BOTTOM PLATE WITH TWO 16d NAILS. FACE NAIL DOUBLE TOP PLATE WITH 16d @ 12" O.C. AND LAP MINIMUM 4'-0" AT JOINTS AND PROVIDE EIGHT 16d NAILS @ 4" O.C. EACH SIDE JOINT.

    ALL STUD WALLS SHALL HAVE THEIR LOWER WOOD PLATES ATTACHED TO WOOD FRAMING BELOW WITH TWO ROWS OF 16d NAILS @ 12" ON-CENTER, OR ATTACHED TO CONCRETE BELOW WITH 5/8" DIAMETER ANCHOR BOLTS @ 4'-0" ON-CENTER EMBEDDED 7" MINIMUM, UNLESS INDICATED OTHERWISE. INDIVIDUAL MEMBERS OF BUILT-UP POSTS SHALL BE NAILED TO EACH OTHER WITH TWO ROWS OF 16d @12" ON-CENTER. UNLESS OTHERWISE NOTED, GYPSUM WALLBOARD SHALL BE FASTENED TO THE INTERIOR SURFACE OF ALL STUDS AND PLATES WITH NO. 6 X 1-1/4" TYPE S OR W SCREWS @ 8" ON-CENTER. UNLESS INDICATED OTHERWISE, 1/2" (NOMINAL)APA RATED SHEATHING (SPAN RATING 24/0) SHALL BE NAILED TO ALL EXTERIOR SURFACES WITH 8d NAILS @ 6" ON-CENTER AT PANEL EDGES AND TOP AND BOTTOM PLATES (BLOCK UN-SUPPORTED EDGES)AND TO ALL INT

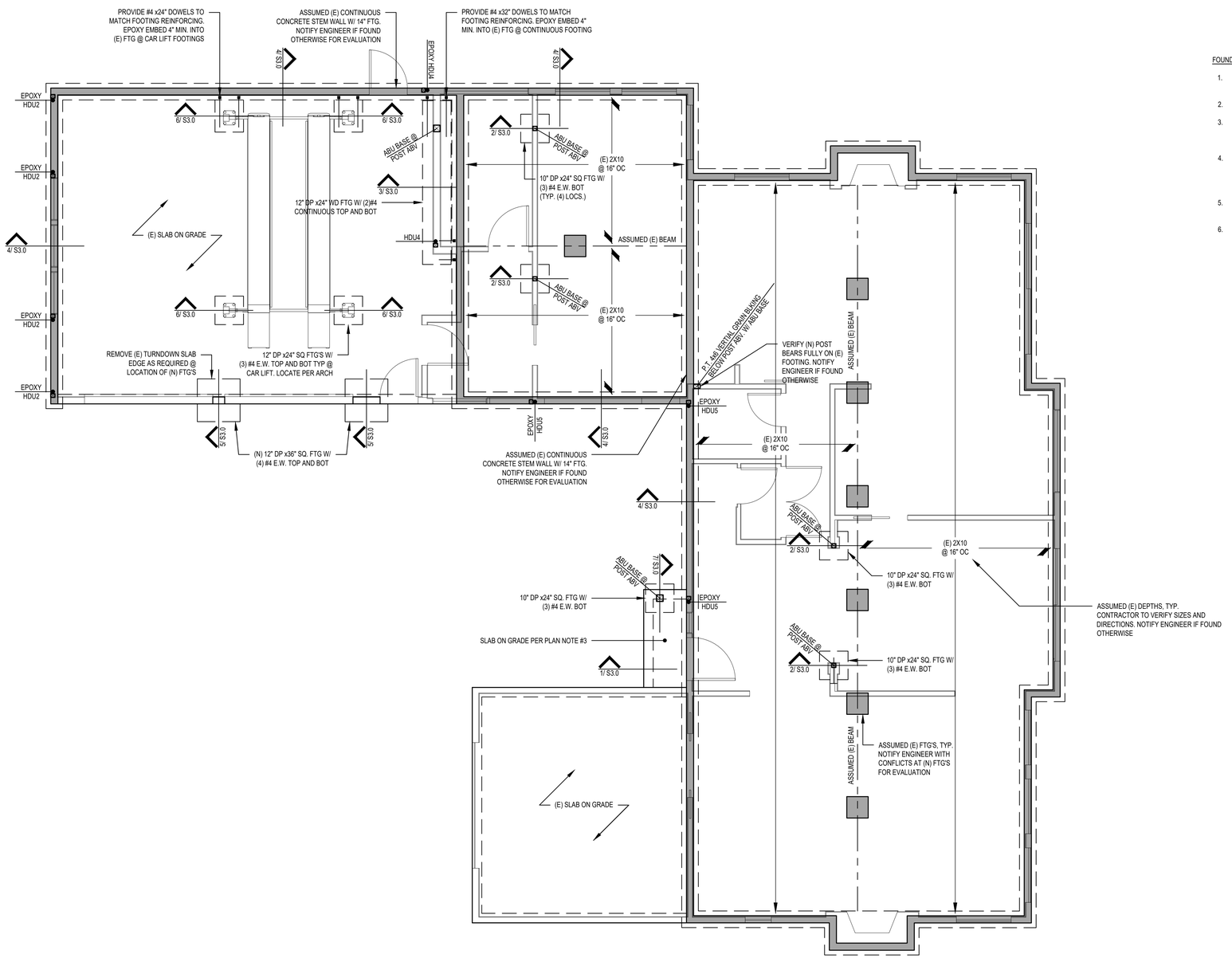

1 FOUNDATION/MAIN FLOOR FRAMING PLAN

SCALE: 1/4" = 1'-0"

FOUNDATION/MAIN FLOOR FRAMING PLAN NOTES: (TYPICAL, UNLESS NOTED OTHERWISE

1. DO NOT SCALE DRAWINGS. REFER TO ARCHITECTURAL DRAWINGS FOR ALL DIMENSIONS.
2. THE BOTTOM OF ALL NEW EXTERIOR FOOTINGS SHALL BE 18" MINIMUM BELOW GRADE.
3. NEW EXTERIOR SLAB ON GRADE SHALL BE 4" CONCRETE SLAB OVER 4" OF GRAVEL OR CRUSHED ROCK OVER FIRM UNDISTURBED SOIL OR ENGINEERED COMPACTED BACK-FILL. REINFORCE WITH #3 REBAR @ 16" OC.
4. PROVIDE EPOXY GROUTED #4 x 2'-6" DOWELS EMBEDDED A MINIMUM OF 6" INTO EXISTING CONCRETE TO MATCH NEW HORIZONTAL REINFORCING. TYPICAL WHERE NEW CONCRETE WALL OR FOOTING TERMINATES AT EXISTING CONCRETE. EPOXY GROUT PER GENERAL STRUCTURAL NOTES.
5. ALL POSTS ABOVE SHALL BEAR FULLY ON BEAMS OR POSTS BELOW AND SHALL HAVE CONTINUOUS FULL BEARING THROUGH FLOORS TO THE FOUNDATION.
6. REFER TO GENERAL STRUCTURAL NOTES FOR ADDITIONAL REQUIREMENTS.

STURMAN ARCHITECTS
TEL (425) 451-7003
9 103rd Avenue NE
Suite 203
Bellevue, WA 98004

5562 REGISTERED ARCHITECT
BRADLEY J. STURMAN
STATE OF WASHINGTON

www.sturmanarchitects.com
All Rights Reserved
© 2020

MORELLI RESIDENCE

8454 W MERCER WAY
MERCER ISLAND, WA 98040

FOUNDATION PLAN MAIN FLOOR FRAMING

REVISIONS:

DRAWN BY: JM

CHECKED BY: BJS

STRUCTURE ONLY
01-20-21

SCALE: IF SHEET IS LESS THAN 24" x 36", IT IS A REDUCED PRINT, REDUCE SCALE ACCORDINGLY

SCHEMATIC SET 08/06/2020

PLOT DATE: 1/20/2021 FILE NAME:

SHEET S2.0

OF

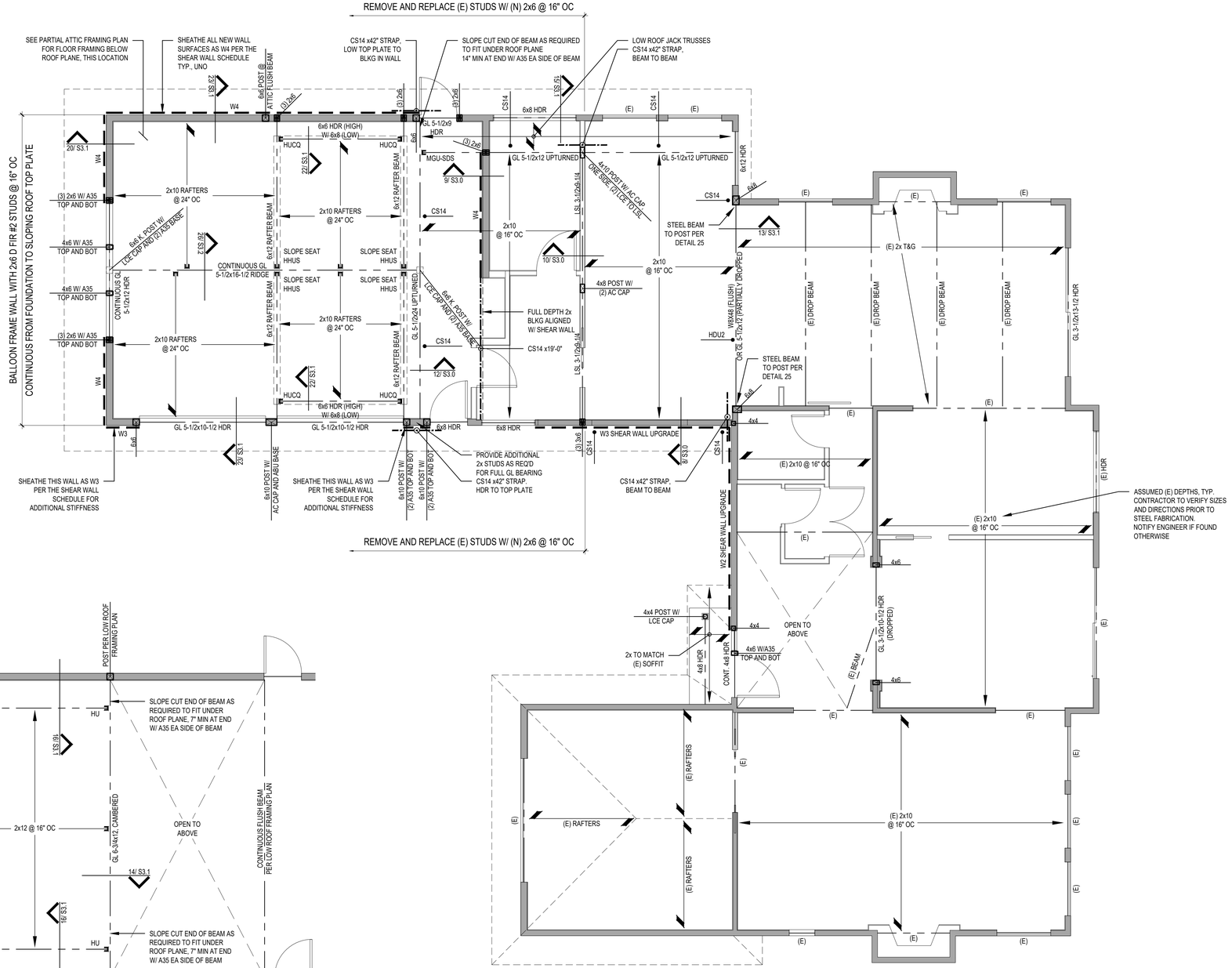

PARTIAL ATTIC FLOOR FRAMING PLAN

SCALE: 1/4" = 1'-0"

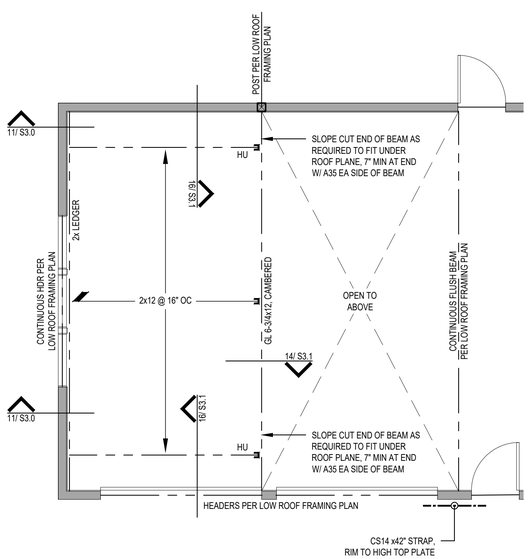

1 LOW ROOF FRAMING/UPPER FLOOR FRAMING PLAN

SCALE: 1/4" = 1'-0"

UPPER FLOOR/LOW ROOF FRAMING PLAN NOTES: (TYPICAL, UNLESS NOTED OTHERWISE

1. DO NOT SCALE DRAWINGS. REFER TO ARCHITECTURAL DRAWINGS FOR ALL DIMENSIONS.
2. NEW FLOOR SHEATHING SHALL BE 3/4" A.P.A. RATED PANELS (EXPOSURE 1, SPAN RATING 48/24).FACE GRAIN PERPENDICULAR TO FLOOR FRAMING PER PLAN. NAIL AT ALL FRAMED PANEL EDGES WITH 8D AT 6" OC AND TO ALL INTERMEDIATE FRAMING AT 12" OC.
3. NEW FLOOR JOISTS SHALL BE 2X HEM FIR NO.2 PER PLAN.
4. NEW ROOF SHEATHING SHALL BE 1/2" A.P.A. RATED PANELS (EXPOSURE 1, SPAN RATING 32/16), FACE GRAIN PERPENDICULAR TO ROOF FRAMING PER PLAN. NAIL SHEATHING AT ALL FRAMED PANEL EDGES WITH 8D AT 6" OC AND TO ALL INTERMEDIATE FRAMING AT 12" OC.
5. NEW ROOF FRAMING SHALL BE PREFABRICATED ROOF TRUSSES AT 24" OC. TRUSS DESIGN TO BE PROVIDED BY OTHERS. SEE STRUCTURAL NOTES FOR DESIGN REQUIREMENTS.
6. PROVIDE H1 HURRICANE TIE AT EACH RAFTER WHERE IT BEARS ON EXTERIOR WALL.
7. HEADERS OVER DOOR AND WINDOW OPENINGS SHALL BE PER PLAN. PROVIDE (2) JACK STUDS AND (1) KING STUD (MINIMUM) AT EACH END OF ALL HEADERS UNLESS NOTED OTHERWISE ON PLANS.
8. W# INDICATES SHEAR WALL. SEE SHEARWALL SCHEDULE FOR CONSTRUCTION REQUIREMENTS.
9. (X) CS16 INDICATES VERTICAL HOLD-DOWN STRAP AT END OF SHEAR WALL ABOVE. (X) INDICATES STRAP QUANTITY.
10. MANUFACTURED LUMBER PRODUCTS (LSL, LVL, PSL, GL) SHALL BE INSTALLED WITH A MOISTURE CONTENT OF 12% OR LESS. THE CONTRACTOR SHALL MAKE PROVISIONS DURING CONSTRUCTION TO PREVENT THE MOISTURE CONTENT OF INSTALLED BEAMS EXCEEDING 12%.
11. ALL POSTS ABOVE SHALL BEAR FULLY ON BEAMS OR POSTS BELOW AND SHALL HAVE CONTINUOUS FULL BEARING THROUGH FLOORS TO THE FOUNDATION.
12. REFER TO GENERAL STRUCTURAL NOTES FOR ADDITIONAL REQUIREMENTS.

STORAGE LOFT FRAMING PLAN NOTES: (TYPICAL, UNLESS NOTED OTHERWISE)

1. DO NOT SCALE DRAWINGS. REFER TO ARCHITECTURAL DRAWINGS FOR ALL DIMENSIONS.
2. NEW FLOR SHEATHING SHALL BE 3/4" A.P.A RATED PANELS (EXPOSURE 1, SPAN RATING 48/24), FACE GRAIN PERPENDICULAR TO FLOOR FRAMING PER PLAN. NAIL AT ALL FRAMED PANEL EDGES WITH 8D AT 6" OC AND TO ALL INTERMEDIATE FRAMING AT 12" OC.
3. FLOOR JOISTS SHALL BE 2x HEM FIR NO.2 PER PLAN.
4. MANUFACTURED LUMBER PRODUCTS (LSL, LVL, PSL, GL) SHALL BE INSTALLED WITH A MOISTURE CONTENT OF 12% OR LESS. THE CONTRACTOR SHALL MAKE PROVISIONS DURING CONSTRUCTION TO PREVENT THE MOISTURE CONTENT OF INSTALLED BEAMS FROM EXCEEDING 12%.
5. ALL POSTS ABOVE SHALL BEAR FULLY ON BEAMS OR POSTS BELOW AND SHALL HAVE CONTINUOUS FULL BEARING THROUGH FLOORS TO THE FOUNDATION.
6. REFER TO GENERAL STRUCTURAL NOTES FOR ADDITIONAL REQUIREMENTS.

STURMAN ARCHITECTS

TEL (425) 451-7003

9 103rd Avenue NE
Suite 203
Bellevue, WA 98004

5562 REGISTERED ARCHITECT
BRADLEY J. STURMAN
STATE OF WASHINGTON

www.sturmanarchitects.com
All Rights Reserved
© 2020

MORELLI RESIDENCE

8454 W MERCER WAY
MERCER ISLAND, WA 98040

UPPER FLOOR FRAMING
LOW ROOF FRAMING PLAN
PARTIAL ATTIC FRAMING

REVISIONS:

DRAWN BY: JM

CHECKED BY: BJS

STRUCTURE ONLY
01-20-21

SCALE: IF SHEET IS LESS THAN 24" x 36", IT IS A REDUCED PRINT, REDUCE SCALE ACCORDINGLY

SCHEMATIC SET 08/06/2020

PLOT DATE: 1/20/2021 FILE NAME:

SHEET S2.1

OF

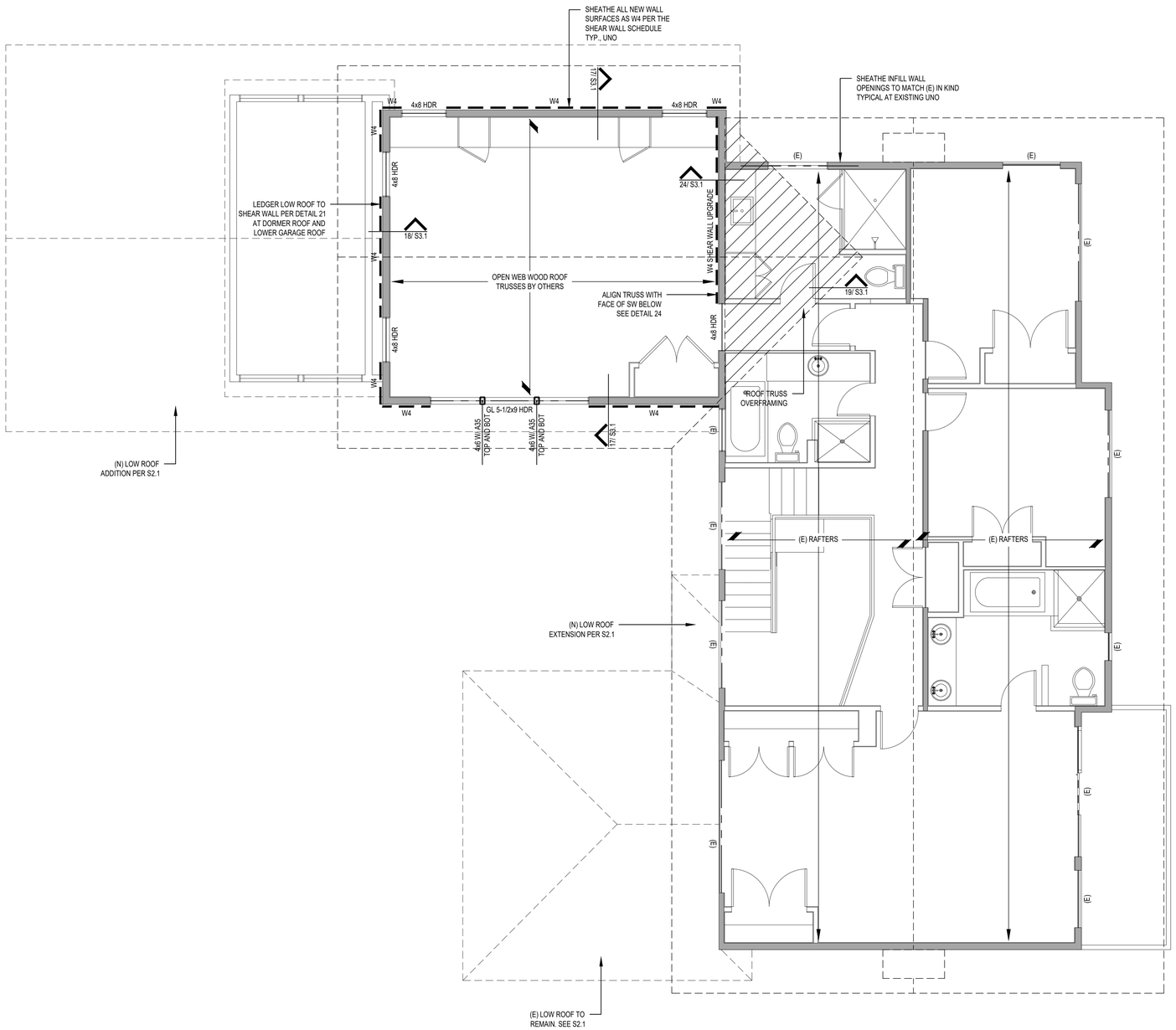

1 HIGH ROOF FRAMING PLAN

SCALE: 1/4" = 1'-0"

HIGH ROOF FRAMING PLAN NOTES: (TYPICAL, UNLESS NOTED OTHERWISE

1. DO NOT SCALE DRAWINGS. REFER TO ARCHITECTURAL DRAWINGS FOR ALL DIMENSIONS.
2. NEW ROOF SHEATHING SHALL BE 1/2" A.P.A. RATED PANELS (EXPOSURE 1, SPAN RATING 32/16), FACE GRAIN PERPENDICULAR TO ROOF FRAMING PER PLAN. NAIL SHEATHING AT ALL FRAMED PANEL EDGES WITH 8D AT 6" OC AND TO ALL INTERMEDIATE FRAMING AT 12" OC.
3. NEW ROOF FRAMING SHALL BE PREFABRICATED ROOF TRUSSES AT 24" OC. TRUSS DESIGN TO BE PROVIDED BY OTHERS. SEE STRUCTURAL NOTES FOR DESIGN REQUIREMENTS.
4. HEADERS OVER DOOR AND WINDOW OPENINGS SHALL BE PER PLAN. PROVIDE (2) TRIMMER STUDS AND (1) KING STUD (MINIMUM) AT EACH END OF ALL HEADERS UNLESS NOTED OTHERWISE ON PLANS.
5. W # INDICATES SHEAR WALL. SEE SHEARWALL SCHEDULE FOR CONSTRUCTION REQUIREMENTS.
6. PROVIDE H1 HURRICANE TIE AT EACH TRUSS WHERE IT BEARS ON EXTERIOR WALL.
7. MANUFACTURED LUMBER PRODUCTS (LSL, LVL, PSL, GL) SHALL BE INSTALLED WITH MOISTURE CONTENT OF 12% OR LESS. THE CONTRACTOR SHALL MAKE PROVISIONS DURING CONSTRUCTION TO PREVENT THE MOISTURE CONTENT OF INSTALLED BEAMS FROM EXCEEDEDING 12%.
8. ALL POSTS ABOVE SHALL BEAR FULLY ON BEAMS OR POSTS BELOW AND SHALL HAVE CONTINUOUS FULL BEARING THROUGH FLOORS TO THE FOUNDATION.
9. REFER TO GENERAL STRUCTURAL NOTES FOR ADDITIONAL REQUIREMENTS.

STURMAN ARCHITECTS

TEL (425) 451-7003

9 103rd Avenue NE
Suite 203
Bellevue, WA 98004

5562 REGISTERED ARCHITECT
BRADLEY J. STURMAN
STATE OF WASHINGTON

www.sturmanarchitects.com
All Rights Reserved
© 2020

MORELLI RESIDENCE

8454 W MERCER WAY
MERCER ISLAND, WA 98040

HIGH ROOF FRAMING PLAN

REVISIONS:

DRAWN BY: JM

CHECKED BY: BJS

STRUCTURE ONLY
01-20-21

SCALE: IF SHEET IS LESS THAN 24" x 36", IT IS A REDUCED PRINT, REDUCE SCALE ACCORDINGLY

SCHEMATIC SET 08/06/2020

PLOT DATE: 1/20/2021 FILE NAME:

SHEET S2.2

OF

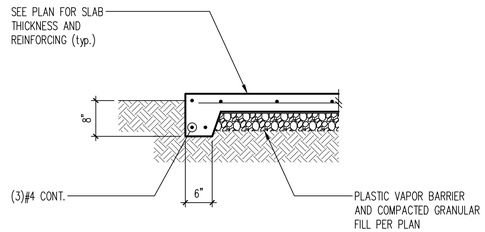

1 TYPICAL SLAB EDGE
SCALE: 3/4" = 1'-0"

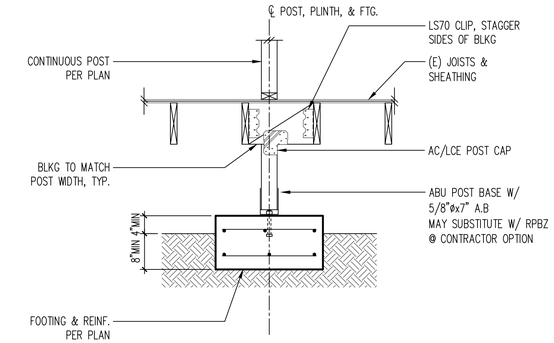

2 FOOTING UNDER NEW WALL
SCALE: 3/4" = 1'-0"

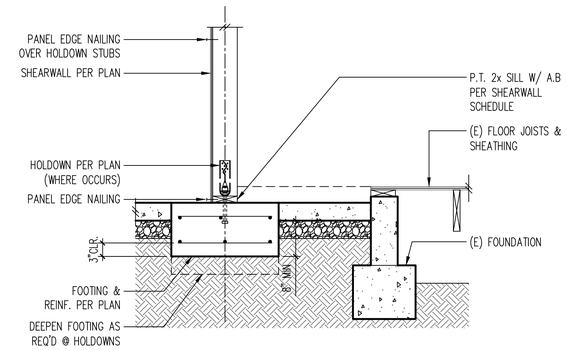

3 (N) FOOTING BY (E) FOUNDATION
SCALE: 3/4" = 1'-0"

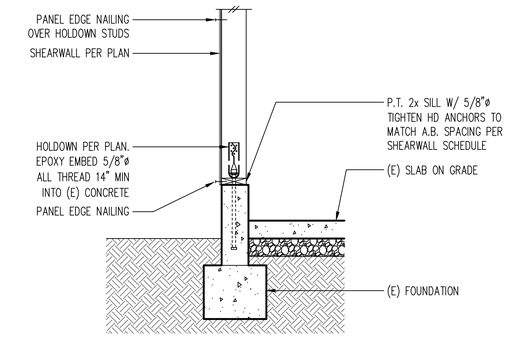

4 (N) SHEARWALL ON (E) FOUNDATION
SCALE: 3/4" = 1'-0"

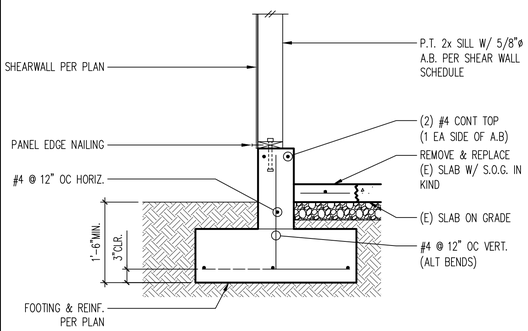

5 (N) STEMWALL OVER (E) SLAB
SCALE: 3/4" = 1'-0"

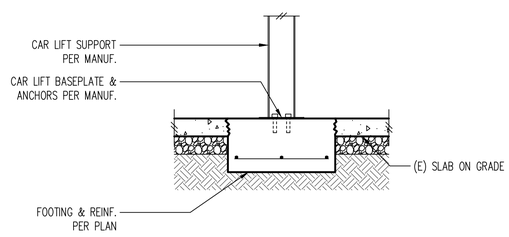

6 LIFT FOOTING
SCALE: 3/4" = 1'-0"

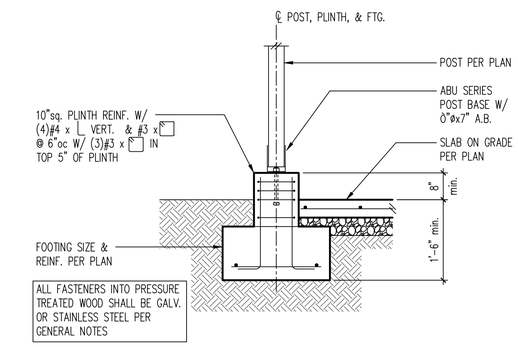

7 SQUARE PLINTH DECK OR CANOPY POST FOOTING
SCALE: 3/4" = 1'-0"

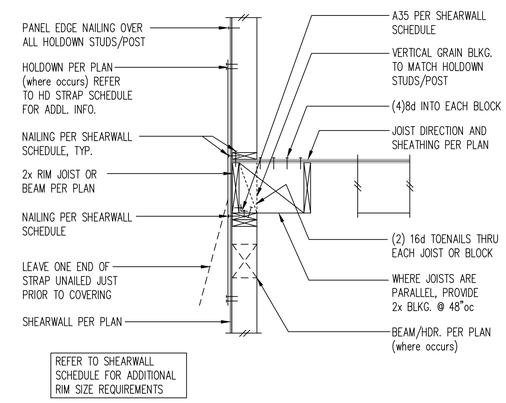

8 EXTERIOR FLOOR FRAMING
SCALE: 3/4" = 1'-0"

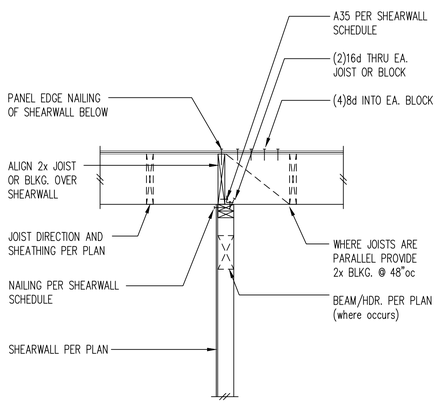

9 INTERIOR SHEARWALL BELOW FLOOR
SCALE: 3/4" = 1'-0"

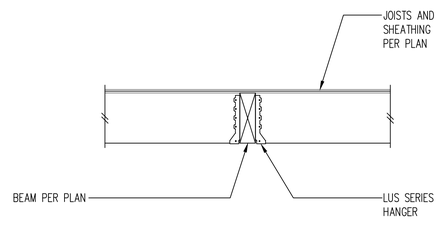

10 TYPICAL FLUSH BEAM
SCALE: 3/4" = 1'-0"

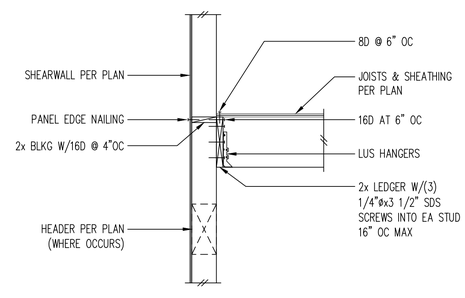

11 PARTIAL ATTIC FLOOR FRAMING
SCALE: 3/4" = 1'-0"

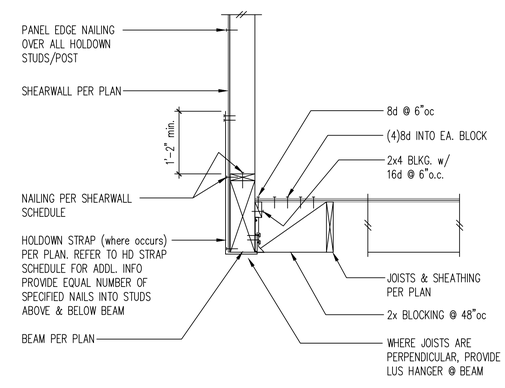

12 JOIST PARALLEL TYP EXT UPTURNED FLOOR BEAM
SCALE: 3/4" = 1'-0"

STURMAN ARCHITECTS

TEL (425) 451-7003

9 103rd Avenue NE
Suite 203
Bellevue, WA 98004

5562 REGISTERED ARCHITECT
BRADLEY J. STURMAN
STATE OF WASHINGTON

www.sturmanarchitects.com
All Rights Reserved
© 2020

MORELLI RESIDENCE

8454 W MERCER WAY
MERCER ISLAND, WA 98040

STRUCTURAL DETAILS

REVISIONS:

DRAWN BY: JM

CHECKED BY: BJS

STRUCTURE ONLY
01-20-21

SCALE: IF SHEET IS LESS THAN 24" x 36", IT IS A REDUCED PRINT, REDUCE SCALE ACCORDINGLY

PLOT DATE: 1/20/2021 | FILE NAME:

SHEET
S3.0
OF

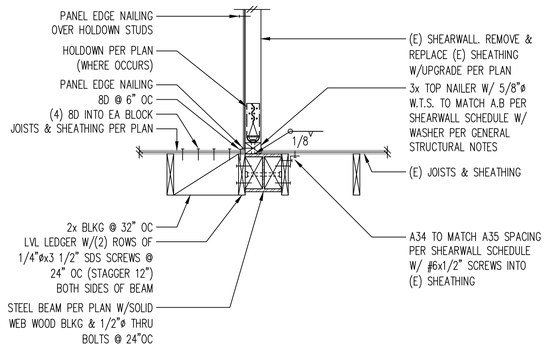

13 FLUSH BEAM AT GREAT ROOM
SCALE: 3/4" = 1'-0"

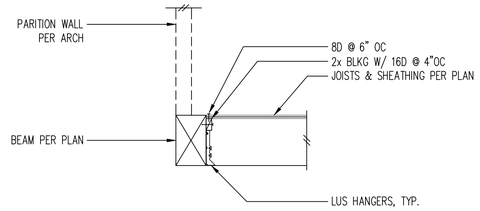

14 PARTIAL ATTIC EDGE
SCALE: 3/4" = 1'-0"

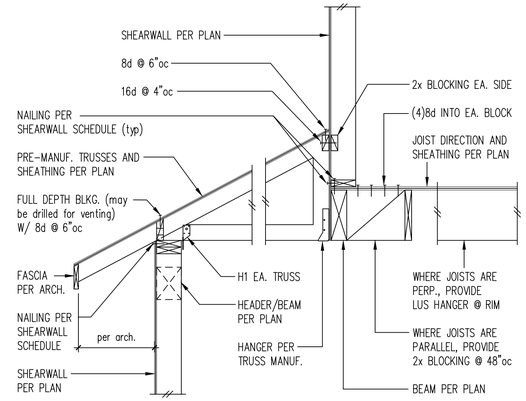

15 TRUSS HUNG AT FLOOR
SCALE: 3/4" = 1'-0"

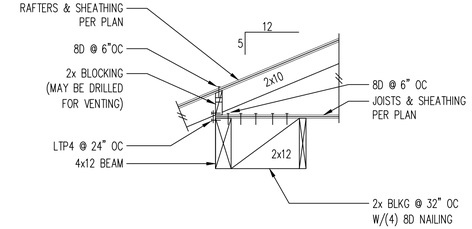

16 PARTIAL ATTIC ROOF TRUSS
SCALE: 3/4" = 1'-0"

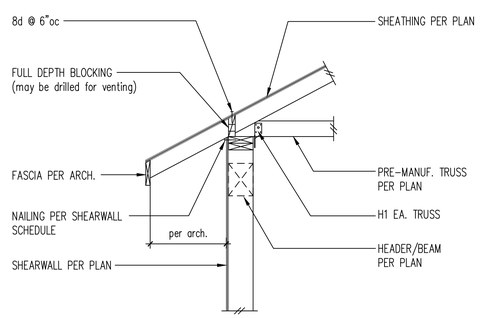

17 EXTERIOR BEARING WALL
SCALE: 3/4" = 1'-0"

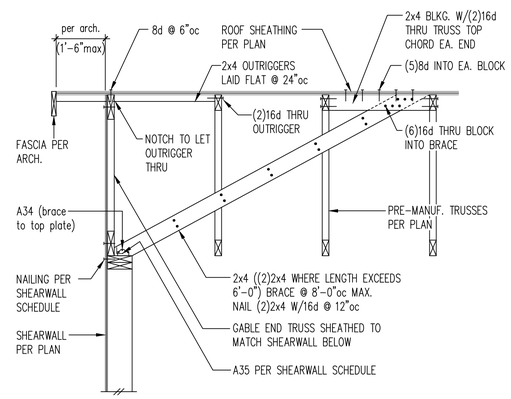

18 EXTERIOR NON-BEARING WALL
SCALE: 3/4" = 1'-0"

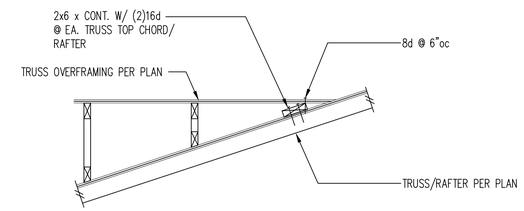

19 OVERFRAMING CONNECTION
SCALE: 3/4" = 1'-0"

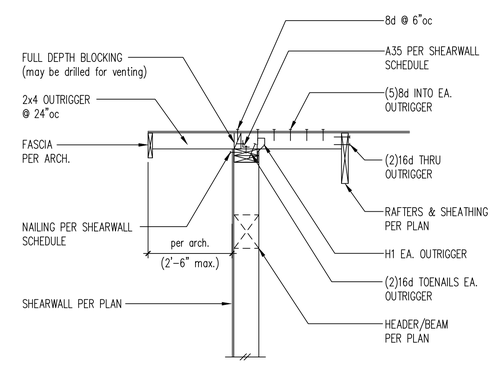

FULL DEPTH OUTRIGGER
20 EXTERIOR NON-BEARING WALL
SCALE: 3/4" = 1'-0"

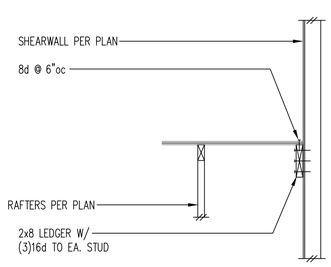

21 TYPICAL PARALLEL TRUSS LEDGER
SCALE: 3/4" = 1'-0"

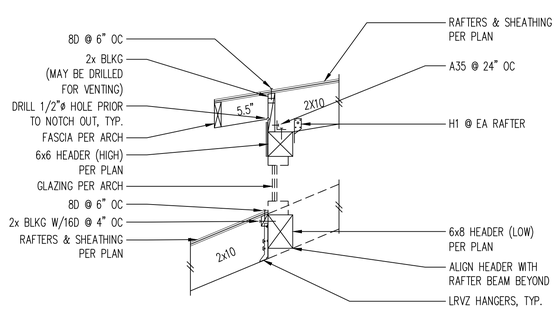

22 DORMER WINDOW DETAIL
SCALE: 3/4" = 1'-0"

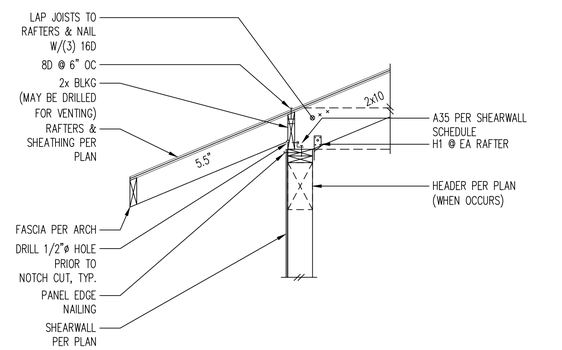

23 GARAGE LOW ROOF CONNECTION
SCALE: 3/4" = 1'-0"

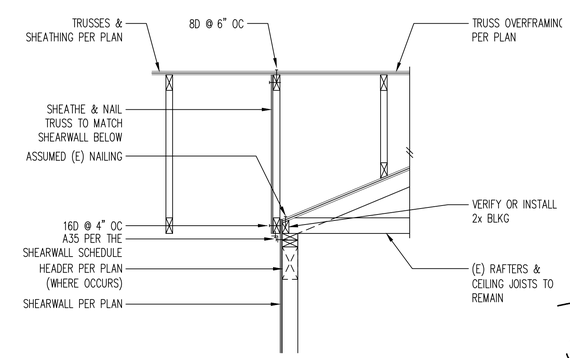

24 TRUSS OVERFRAME @ SHEARWALL
SCALE: 3/4" = 1'-0"

STRUCTURE ONLY
01-20-21

SCALE: IF SHEET IS LESS THAN 24" x 36", IT IS A REDUCED PRINT, REDUCE SCALE ACCORDINGLY

08/06/2020

PLOT DATE: 1/20/2021 | FILE NAME:

STURMAN ARCHITECTS
TEL (425) 451-7003
9 103rd Avenue NE
Suite 203
Bellevue, WA 98004

5562 REGISTERED ARCHITECT
BRADLEY J. STURMAN
STATE OF WASHINGTON

www.sturmanarchitects.com
All Rights Reserved
© 2020

MORELLI RESIDENCE
8454 W MERCER WAY
MERCER ISLAND, WA 98040

STRUCTURAL DETAILS

REVISIONS:

DRAWN BY: JM
CHECKED BY: BJS

SHEET
S3.1
OF

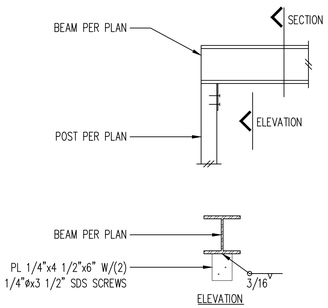

25 STEEL BEAM TO POST
SCALE: 3/4" = 1'-0"

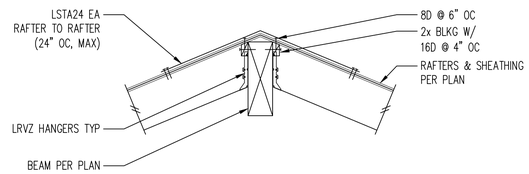

26 GARAGE RIDGE BEAM
SCALE: 3/4" = 1'-0"

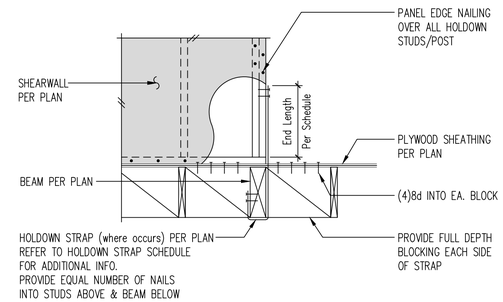

A CS/CMST HOLDOWN FLOOR BEAM PERPENDICULAR
SCALE: 3/4" = 1'-0"

Holdown Strap Schedule

Plan Mark	End Length	#Nails Ea End Length	Holdown Studs/Post if 2x4	if 2x6
CS16	1'-2"	(13) 8d	(1) 2x4	(1) 2x6
CMST14	2'-6"	(33) 10d	4x6	4x6
CMST12	3'-3"	(43) 10d	4x8	6x6

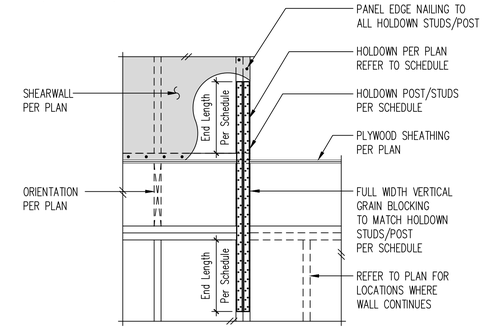

B TYPICAL HOLDOWN SCHEDULE
SCALE: 3/4" = 1'-0"

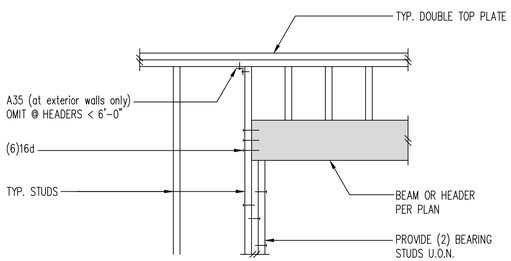

C TYPICAL HEADER SUPORT W/2 BEARING STUDS
SCALE: 3/4" = 1'-0"

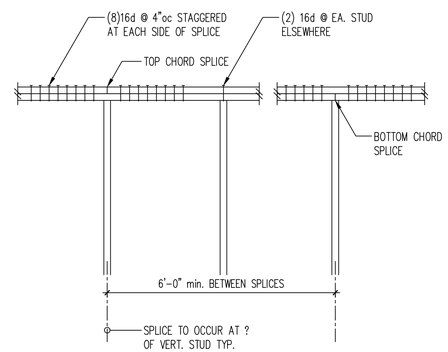

D TYPICAL TOP PLATE SPLICE
SCALE: 3/4" = 1'-0"

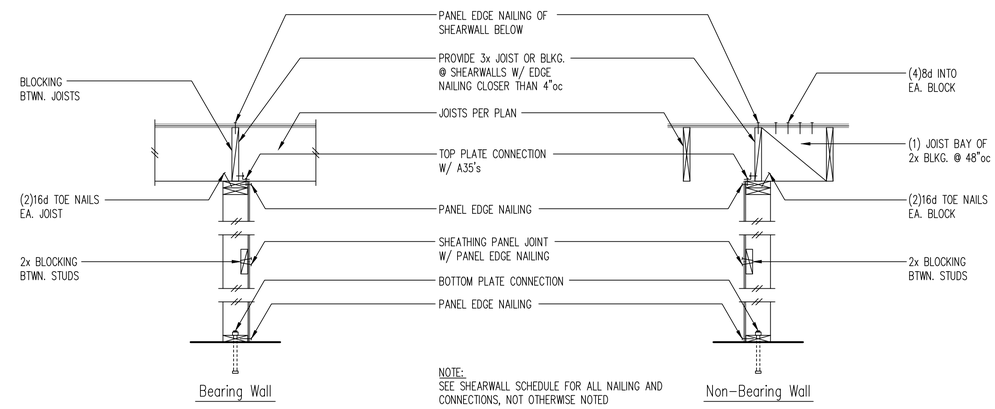

NOTE:
SEE SHEARWALL SCHEDULE FOR ALL NAILING AND CONNECTIONS, NOT OTHERWISE NOTED

E TYPICAL SHEARWALL CONSTRUCTION
SCALE: 3/4" = 1'-0"

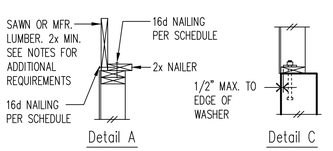

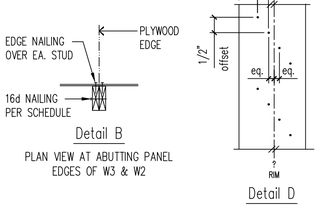

Shearwall Schedule②③⑤⑥⑦

Mark	Sheathing	Panel Edge Nailing	Top Plate Connection if TJI	Top Plate Connection if Wood⑧⑨	Base Plate Connection at Wood⑩	Base Plate Connection at Concrete
W6	15/32" CDX PLYWOOD	8d @ 6"oc	16d @ 6"oc	A35 @ 24"oc	16d @ 6"oc	⌀"ø A.B. @ 48"oc
W4	15/32" CDX PLYWOOD	8d @ 4"oc	16d @ 4"oc	A35 @ 16"oc	(2)rows 16d @ 6"oc	⌀"ø A.B. @ 32"oc
W3 ④	15/32" CDX PLYWOOD	8d @ 3"oc	(2)rows 16d @ 4"oc	A35 @ 12"oc	(2)rows 16d @ 6"oc	⌀"ø A.B. @ 24"oc
W2 ④	15/32" CDX PLYWOOD	8d @ 2"oc	(2)rows 16d @ 4"oc	A35 @ 9"oc	(2)rows 16d @ 4"oc⑪	⌀"ø A.B. @ 16"oc

① BLOCK PANEL EDGES WITH 2x MIN. LAID FLAT AND NAIL PANELS TO INTERMEDIATE SUPPORTS WITH 8d @ 12"o.c.

② 8d NAILS SHALL BE 0.131"? x 2 1/2" (common) – 16d NAILS SHALL BE 0.135"ø x 3 1/2" (box)

③ EMBED ANCHOR BOLTS AT LEAST 7". EXPANSION BOLTS MAY BE SUBSTITUTED FOR ANCHOR BOLTS WITH 4" EMBEDMENT. TITEN HD SCREW ANCHORS MAY BE SUBSTITUTED FOR ANCHOR BOLTS W/ 4" EMBEDMENT. ALL BOLTS SHALL HAVE 3" x 3" x 1/4" MIN. PLATE WASHERS. PLATE WASHERS SHALL EXTEND TO WITHIN 1/2" OF THE EDGE OF THE BOTTOM PLATE ON THE SIDE WITH SHEATHING. SEE DETAIL C.

④ 3x STUDS OR DOUBLE STUDS NAILED TOGETHER W/ BASE PLATE NAILING ARE REQUIRED AT ABUTTING PANEL EDGES OF W3 AND W2. SEE DETAIL B. WHERE 3x STUDS ARE USED FOR W2, STAGGER NAILS AT ADJOINING PANEL EDGES.

⑤ TWO STUDS MINIMUM ARE REQUIRED AT EACH END OF ALL SHEARWALLS AND ALL END STUDS SHALL RECEIVE PANEL EDGE NAILING. SEE PLANS AND HOLDOWN SCHEDULE FOR ALTERNATE REQUIREMENTS.

⑥ ALL EXTERIOR WALLS SHALL BE W6, UNLESS NOTED OTHERWISE.

⑦ 7/16" O.S.B. MAY BE SUBSTITUTED FOR 15/32" CDX.

⑧ LTP4's (HORIZONTAL ORIENTATION) W/ 8d COMMON MAY BE SUBSTITUTED FOR A35's AT CONTRACTORS OPTION.

⑨ A 2x NAILER ATTACHED W/ BASE PLATE NAILING PER DETAIL A MAY BE SUBSTITUTED FOR A35's AT CONTRACTORS OPTION.

⑩ AT MULTI-ROW NAILING, MINIMUM OFFSET BETWEEN ROWS AND ROW SPACING 1/2", SEE DETAIL D.

⑪ PROVIDE (3) ROWS 16d @ 6"oc AT LVL RIMS.

F SHEARWALL SCHEDULE - (SHEATHED ONE SIDE)
SCALE: 3/4" = 1'-0"

STURMAN ARCHITECTS
TEL (425) 451-7003
9 103rd Avenue NE
Suite 203
Bellevue, WA 98004

5562 REGISTERED ARCHITECT
BRADLEY J. STURMAN
STATE OF WASHINGTON

www.sturmanarchitects.com
All Rights Reserved
© 2020

MORELLI RESIDENCE
8454 W MERCER WAY
MERCER ISLAND, WA 98040

STRUCTURAL DETAILS

STRUCTURE ONLY
01-20-21

REVISIONS:

DRAWN BY: JM
CHECKED BY: BJS

SCALE: IF SHEET IS LESS THAN 24" x 36", IT IS A REDUCED PRINT, REDUCE SCALE ACCORDINGLY

SCHEMATIC SET 08/06/2020
PLOT DATE: 1/20/2021 FILE NAME:

SHEET
S3.2
OF